Department of Agriculture, Trade and Consumer Protection
Division of Agricultural Development
Agricultural Development & Diversification Program (ADD)
Grant Project Final Report

Contract Number: 21059

Grant Project Title: Development of Business Infrastructure and Equipment for the Growing Commercial Hazelnut Industry in Wisconsin

Amount of Funding Awarded: $18,000

Name of Principal Contact Person: Mark Shepard, New Forest Farms, LLC

Address: PO Box 24, Viola, WI 54664

Telephone:

E-Mail Address: forestag@mwt.net

WEB Address:

Report Submitted on: 3-15-07

Final Report
WI DATCP contract No: 21059
Project title: Development of Business Infrastructure and Equipment for the Growing Commercial Hazelnut Industry in Wisconsin

The original intent of this grant:

The original intent of this grant was multifold. Much has been learned in the past few years concerning hybrid hazelnuts as an agricultural crop and many growers have established plantings with the intention of being a part of the fledgling hazelnut industry. How many growers have actually done this? Where are they actually located across the upper Midwest? How many plants do they have in the ground? How old are the plants? How many are bearing nuts? How many nuts do the current plants produce? Does this grower and plant base actually constitute an industry? If so, what are the next critical equipment and infrastructure needs to assist this growing group. If the current grower and plant base does not constitute an industry, then what steps need to occur to finally bring the hazelnut industry to birth in the region.

What we intended to accomplish:

With this grant we intended to make some major steps toward the commercialization of hazelnuts as an agricultural crop in the region. What was needed first was information. In order to have a hazelnut industry we would need to know how many hazelnut plants were actually growing in the region. Knowing that, we would need to know what stage of development the plants were at and what some of their basic yield characteristics were.

We also wanted to build a prototype hazelnut cracker that would crack the wide variety of shapes and sizes common in the existent hybrids. Rather than going down the road traveled by other nut growers and designing crackers that only work on nuts of uniform sizes and shell characteristics, we wanted to build a nutcracker that would work on hazelnuts of all shapes and sizes with all shell thicknesses from paper-thin, to thick as a wild hazel. In fact we wanted to build a cracker that would work on wild hazelnuts as well, which represent a unique market of their own.

With the knowledge of the numbers of hazelnut growers, and with a functioning hazelnut cracker we hoped to have hazelnuts tested by various potential markets for their oil content and characteristics, as well as their flavoring compounds. And finally we wanted to synthesize all of the above information in order to guide the industry into the next phase of its commercial development.

Benefits to Wisconsin Agriculture:

This project was seen as a critical phase in the commercialization of hazelnuts as an agricultural crop in Wisconsin, and we believe that the work done has indeed been so. Upon completion of this project, we have discovered that nearly all of the pieces are in place for the birth of a Wisconsin Hazelnut industry. A hazelnut industry can benefit Wisconsin agriculture by providing new, high value crops for farmers to grow, high value crops with multiple markets: Food, feed, industrial feedstocks.oils, flavoring compounds and biomass products in the form of hazelnut shell (harvested annually) as well as coppiced wood. Hazelnuts are not only a high value crop with multiple markets (from niche to industrial) they are perennials and require planting only once. They can be used in riparian zones to help improve water quality. They can be used to provide habitat for upland gamebirds (quail, partridge, pheasant, turkeys) while still providing a saleable crop for farmers. This project can also be instrumental in positioning Wisconsin hazelnut growers as the emerging producers in a crop where Pacific Northwest growers are losing hundreds acres of hazelnuts each year due to urban sprawl and the advance of Eastern Filbert Blight. (the majority of the hazelnuts grown in the upper Midwest are genetically resistant to eastern filbert blight.)

The Project:

Work proceeded in three simultaneous directions. Beginning in July of 07, Blaine Schoenhard, a senior at the University of Wisconsin Stevens Point, was contracted to collect field data. His data collection duties included 1) locating as many of the known hybrid hazelnut growers in the upper Midwest, (Eastern IA & MN, Wisconsin

and Northern IL) 2) interviewing said growers to determine a number of statistics concerning their hazelnut plants 3) doing an actual plant-by-plant, hand-counted inventory and basic reporting on of all the known hybrid hazelnut plantings in the region.

In addition to the broadscale, general information, Blaine was charged with gathering some very specific crop performance statistics. For this, he used the same hazelnut planting described in ADD project 15086 in the year 2000 where over 10,000 Badgersett Hybrid Hazelnut tubelings were planted at New Forest Farms LLC in Viola, WI. This would allow for consistency in reporting since the original site establishment data could be directly compared to what is in the ground today.

The information Blaine gathered was written in a report form that he submitted to the University of Wisconsin Stevens point and it is attached to this report as appendix 1.

Overall the data collection effort was quite successful. For the most part growers were willing to share their names and contact information with Blaine presumably because they are invested in helping the hazelnut industry to grow. The biggest challenge faced by Blaine during this project, aside from many hundreds of miles on the road and crawling through weeds counting plants, was the fact that it was virtually impossible for him to know if he had "found" all of the growers in the region. The person that had the most contact information for past growers, Phillip Rutter owner of the Badgersett Research Corporation in Canton, MN refused to cooperate with Blaine, presumably out of concern that the information learned could potentially have a negative impact on his business.

All totaled, Blaine located and interviewed 32 hazelnut growers. (see appendix 2) Questions asked of growers included contact information, year(s) of plantings, total number of plants planted, site preparation information, crop maintenance information and then any observations that the grower had concerning the establishment of the hazelnut crop. After the interview Blaine hand-counted the surviving hazelnut plants.

Phase 2 of this project was the design and building of a one-size-fits-all hazelnut cracker. This phase of the project has actually been under development for a number of years by Mark Shepard of New Forest Farms LLC. Since 2004 he had been in communication with Nick Raaum, a mechanical engineering student at the University of Wisconsin, Madison. Between the two of them they came up with a prototype concept, which Nick and a team of fellow students submitted to as their senior project. From Jan 2006 to June 2006, the student team designed, built and tested a very rudimentary prototype. It didn't work passably, but the data gathered from the project was enough to assist with the re-design of the nutcracker built during this project. The student design team's work was the launching-off point for the building of this cracker and their final presentation document is attached to this report as appendix 3. Upon the commencement of this project multiple design sessions were held via e-mail, conference call and in-person with Nick Raaum, Mark Shepard and John Bashaw of Pendragon Specialties, a custom machinery fabrication company located in Elkhorn, WI. After the three designers were convinced that they and redesigned to adequately correct all of the known flaws of the student version, John began to fabricate the new machine. Manufacture of the cracking machine took place during the summer and fall of 2006 and it was delivered to New Forest Farms LLC in Viola, WI for testing in October of 2006. Photographs of the completed nutcracker are attached as appendix 4 and 5.

As can be seen in the photographs, the final version of the nutcracker has a more upright form than the student prototype and the impeller is oriented vertically rather than horizontally. The vertical orientation allowed for the motor to be connected to the impeller directly instead of through a 90º gearbox, which would add mechanical complexity, expense, and greatly reduce the overall effectiveness of the cracker. The current design is such as to meet all applicable codes pertaining to operator safety as well food handling equipment.

The nutcracker works quite well. It took several days worth of test-runs before it was adjusted to the point where we consider it to be working acceptably.

What didn't work with the nutcracker, was the separation of the cracked shells from the kernels. The nutcracker is built with a fitting for a high powered vacuum hose to vacuum the (presumably) lighter shells up and away from the heavier kernels. This never worked quite right partially because some of the kernal fragments are small and got sucked up with the shells. Also, some of the shell fragments are large and fell with the whole kernels. From a vacuum separation system we went to a fan and vibrator system where a fan would blow across the stream of falling "debris" and blow the lightest material away from the vibrating receiver tray. The fan was never quite adequate at creating any shell/kernal separation either. Several different fans, in fact at various different speeds and angles were tried all with less than acceptable results.. A vibrating receiver tray beneath the fan was intended to separate kernal and shell even further and it failed to do so as well. A "V"-shaped vibrating tray was next going to be used when cold weather drove us out of the unheated packing shed.

This inability to adequately separate shell from kernal has caused us more time consuming hand-work in the data collection portion of the project, and it has prevented us from getting sufficient quantities of kernels sent to oil pressing companies and flavor extraction facilities as we had originally intended.

Phase three was to send hazelnut kernels to Great Lakes Biodiesel for pressing into oil. The oil from this pressing was then going to be used to make hazelnut biodiesel which would then be tested by Great Lakes for its efficacy as a fuel. Samples of oile were also going to be sent to True Botanica Inc an herbal remedy and skin-care products company. It as hoped that the would be able to use hazelnut oil from Wisconsin rather than almond oil from California.

After oil pressing, the remaining meal was going to be steam distilled to remove flavoring compounds. Hazelnut flavorings are used in a wide array of value-added products and are potentially a significant market for Wisconsin hazelnut growers.

Summary of Accomplishments:

Growers and Plants:

We have discovered that there are at least 39 hybrid hazelnut growers in the upper Midwest. 32 of them were interviewed and their plants were inventoried. There are 21,798 hybrid hazelnut plants that have been inventoried in Wisconsin and the parts of Il, IA and MN closest to Wisconsin. Using data from a sample population of the New Forest Farms hazelnut planting, (raw data is included in appendices 6-10) it can be estimated that the 21,798 hybrid hazelnut plants in the region, when 5 years old, will be producing an average of 63.3nuts per plant for a total of 1,379,813.4 nuts, or 5,749.22 pounds of hazelnuts. Hybrid hazelnuts are now being produced by the ton!

Plants:

When the Commercial Hazelnut Development Project (ADD project 15086, year 2000) began, there was only one supplier of cold hardy, disease resistant hybrid hazelnut seedlings in the upper Midwest. Grower interviews show that there are now at least three suppliers. The original supplier, the Badgersett Research Co **(**18606 Deer Road, Canton, MN 55922 BadgersettInfo@aol.com,) continues to produce greenhouse grown tubeling stock (plants grown in small, 1" diameter, X 6" deep pots) for planting in early summer. Red Fern Farm (redfernfarm@lisco.com. (319) 729-5905 13882 I Ave Wapello, IA 52653) takes Badgersett Tubelings and "pots up" (transplants them) into 4" wide X 9" deep pots and grows them through one summer. These plants are most commonly planted in the fall. Forest Agriculture Enterprises LLC (forestag@mwt.net 608-627-8733 P O Box 24 Viola, WI 54664) produces 1yr old, 10-18" tall bare-root dormant nursery stock for early spring transplanting.

Some plants included in this inventory came from the National Arbor Day Foundation. The Arbor Day Foundation is the home of the largest planting of Badgersett Hybrid Hazels. They sell seedlings from their plants as a fundraiser. Their Hazelnut program is the centerpiece of their 2007 membership drive.

Survival:

Survival rates for the Badgersett Tubelings were the lowest of all the suppliers, at an average of 41.9 %. This could be for several reasons. One is that their "tubelings" are very small (typically 8" +/-) when shipped to the grower and have root systems that are less than 6" deep. An additional factor affecting survival may also be the fact that they are generally shipped in late May and throughout the summer, while green and actively growing. It is possible that residual springtime soil moisture is gone by the time Badgersett Hazels are planted and it is also possible that the hotter summertime temperatures affect survival as well. This being said, the Badgersett tubelings were the only plants available for years. There is more survival data on them than any other supplier.

Survival rates for the Forest Agriculture Enterprises LLC plants averaged 91.3%. Forest Agriculture Enterprises produces 10-18", 1yr old bare-root dormant nursery stock that is planted in the early spring. The plants are still dormant when planted which reduces transplant shock, and they are planted into soil that still has residual moisture when the temperatures are cool. Plants from Forest Agriculture Enterprises have only been available commercially for 3 years, and its data set was quite small compared to Badgersett.

It was not possible to determine survival rates for "potted up" Badgersett hazels from Red Fern Farm since they were used mostly as replacement plants for Badgersett tubelings that had failed. Since they were mixed in with the original Badgersett planting, it was impossible to tell which plants were which.

Yield: (see appendices 6-10)

The average yield for a five-year-old Badgersett Hybrid hazel, was 63.3 nuts per plant. (appendix 10) At 240 nuts per pound, this translates into .26 lb per plant. At planting densities used for hand-harvest, (840 plants/acre) this would translate into 218.4 lbs/acre of whole, in-shell nuts for a fully stocked planting. 218.4 lbs of in-shell nuts would yield approximately 81.90lbs of kernels. At machine harvestable planting densities (1,400 plants/acre) one acre of five-year-old Badgersett tubelings would yield 364 lbs of nuts or 136.5 lbs of kernals.

The average yield per plant is much lower than anticipated in the previous DATCP hazelnut reports. This is likely because of a number of reasons. The most significant reason is that 5-year old hazelnut plants are young and are just beginning to come into production. From the data gathered during the grower inventory, it appears that the plants come into peak production somewhere between 8 and 10 years. More data will need to be collected over a period of years in order to discover more precisely when this is.

A very significant reason as to why the yields were this low, is that all of the hazelnut plants in the sample are seedlings. Seedling plants are all genetically unique individuals and as such can be quite variable in growth rate, plant form (tall, short, upright, rounded), and productivity. This diversity is both an opportunity and an obstacle. The obstacle it poses is, obviously, unpredictable yields and a ripening season that spans more than a month. The opportunity that is provides is that within the seedling hybrid hazelnut population currently on the landscape, there is a wide range of unique cultivars to choose from. There are over 21,000 unique cultivars existing in the upper Midwest with a wide range of characteristics. There are likely to be many individual cultivars with very specific desirable traits. One of the traits measured during this project was total number of nuts per plant.

An additional reason why yields may not be as high as they could be, is that currently no one knows what the optimal soil fertility regime is for these strains of hazelnuts. Lois Braun, a researcher at the University of Minnesota, St Paul, has conducted some basic research on nutrient uptake in hazelnut seedlings, and is continuing to do such research. There is no data available indicating what the "ideal" soil conditions and nutrition might be for optimum yields. We assume that as more fertility research is done we will be able to increase the average yield-per plant by providing any nutrients that might currently be acting as limits to yield.

Probably the most significant discovery during the yield analysis portion of this project, is the fact that a number of plants in the sample population, clearly show outstanding "overyeilding" characteristics. Six out of the 3567, (one out of 594 plants) in the New Forest Farm sample population yielded more than ten times the average

number of nuts per plant. One plant stood out even more so with 22.15 times more nuts than the average number of nuts per plant. This individual plant yielded 833 nuts or approximately 3.47lbs of nuts.

This information is critically significant for the future of the hazelnut industry in the upper Midwest in that it shows us that it is likely that there is close to a 1 in 3567 chance of finding an overyielding individual. This means that out of the 21,798 plants in the region, there are approximately 6 cultivars capable of producing nearly four pounds of nuts per plant within five years. Currently, all other woody crop industries depend upon specific cultivars for the majority of their production. Apples are familiar to most people and one needs to look no further than the grocer's shelf to realize that there are relatively few commercial cultivars of apple. The same is true in all other woody crops. The hazelnut industry in the Pacific Northwest relies almost entirely on two cultivars for the majority of its production. Once these six potentially superior cultivars are located in the general population of seedlings, they can be mass multiplied by various techniques including grafting, stooling, layering, rooted cuttings or tissue culture. University of Minnesota, St Paul has reproduced hazelnuts from cuttings, and University of Nebraska has reproduced hazelnuts from tissue culture.

This discovery is significant as can be seen in the chart below. Using data gathered in this study, there are an average of 240 nuts per pound.

Seedlings per acre	Yield per plant	yield per acre
840	.26 lb	218.4 lb
1400	.26 lb	364.0 lb

22X Cultivars/ acre	Yield per plant	yield per acre
840	3.47 lb	2,914.8 lb
1400	3.47 lb	4,858.0 lb

It is clear that it is essential to find those potential 6 individual plants and propagate them en-masse. Even if lower yielding plants were included in the cultivar selection process, the yield results would be significantly better than seedlings. In the sample from New Forest Farm, one out of 594 plants produced ten times the average per-plant yield. If one out of 594 plants out-yield the average by a factor of ten, that means there are potentially 36 of these individuals currently on the landscape. The table below compares these 36, 10Xcultivars to the seedling population.

Seedlings per acre	Yield per plant	yield per acre
840	.26 lb	218.4 lb
1400	.26 lb	364.0 lb

10X cultivars/acre	Yield per plant	yield per acre
840	2.6 lb	2,184.0 lb
1400	2.6 lb	3,640.0 lb

Prices

Hazelnut prices have behaved fairly predictably until the last few years. For the ten years before the Commercial Hazelnut Development Project in 2000, the average price per pound for in-shell hazelnuts was around $0.38/lb with a pre 1997 10 year high of $0.50/lb. Since then, prices have climbed and back-to-back wholesale market highs were reached in 2005 and 2006 with $0.70/lb and $1.00/lb respectively. (this information has been derived by researching "Oregon Hazelnuts" and related news releases) These prices are the bulk wholesale hazelnut prices paid to the grower by handlers and packers. This is the lowest price per pound with the highest volume of nuts sold.

Direct-to the consumer prices range from $1.99/lb to $3.00/lb for in-shell nuts, and anywhere from $11.00/lb to $15.00/lb for shelled hazelnuts. The chart below was generated using the average yield per plant, and the various market prices per pound.

Wholesale in-shell

Plant/acre, type	Yield/plant	Market/price	gross$/acre
840, Seedling	.26lb	$0.38/lb	$82.99
1400, Seedling	.26lb	$0.38/lb	$138.32
840, 10X Cultivar	2.6lb	$0.38/lb	$829.90
1400, 10X Cultivar	2.6lb	$0.38/lb	$1,383.20
840, 22X Cultivar	3.47lb	$0.38/lb	$1,107.62
1400, 22X Cultivar	3.47lb	$0.38/lb	$1,846.04

In-Shell, Direct to consumer

Plant/acre,type	Yield/plant	Market/price	gross$/acre
840, Seedling	.26lb	$1.99/lb	$434.62
1400, Seedling	.26lb	$1.99/lb	$724.36
840, 10X Cultivar	2.6lb	$1.99/lb	$4,346.20
1400, 10X, Cultivar	2.6lb	$1.99/lb	$7,243.60
840, 22X Cultivar	3.47lb	$1.99/lb	$5,800.45
1400, 22X Cultivar	3.47lb	$1.99/lb	$9,667.42

Kernals (out-of-shell) (in-shell nuts avg 37.5% kernal by weight)

Plant/acre,type	Yield/plant	Market/price	gross$/acre
840, Seedling	.26lb X 37.5%	$11.99/lb	$981.98
1400, Seedling	.26lb X 37.5%	$11.99/lb	$1,636.64
840,10XCultivar	2.6lb X 37.5%	$11.99/lb	$9,819.80
1400,10XCultiv.	2.6lb X 37.5%	$11.99/lb	$16,366.40
840, 22X Cultiv.	3.47lb X 37.5%	$11.99/lb	$13,105.67
1400,22XCultiv	3.47lb X 37.5%	$11.99/lb	$21,842.78

Conclusions:

There are currently 21,798 hybrid hazelnut plants that have been inventoried growing in the upper Midwest. Adjusted for mortality, there are possibly an additional 12,000 plants that have not been inventoried. (these are not used in any calculations) With an average yield of .26lbs per plant, 21,798 plants should yield 5,667.48lbs of hazelnuts. In Wisconsin alone there are 9373 inventoried hybrid hazelnut plants, which represents a yield of approximately 2,436.9lbs of hazelnuts. At wholesale market prices, ($0.38/lb) this represents $926.05 worth of hazelnuts in Wisconsin, and $2,153.64 worth of hazelnuts in the region. If these nuts are sold directly to the consumer (at 1.99/lb), the value of the hazelnut crop in Wisconsin jumps to $4,849.43 and to $11,278.29 in the region. Clearly a grower's choice of markets significantly impacts the return.

The building of a hazelnut cracker that will crack all shapes, sizes and shell thicknesses of hazelnuts, both hybrid and wild, now allows for hazelnuts to be sold as kernels. (out-of-the-shell) With 2,436.9lbs of hazelnuts being grown in Wisconsin, at 37.5% kernal by weight, this represents 913.84lbs of hazelnut kernels for a total of $10,956.91 in sales at $11.99/lb. There are potentially 2,125.31lbs of kernels available in the region equaling potential sales of $25,482.41.

Before kernal sales can take place, however, the machinery that sorts kernels from shells needs to be perfected. This is a major emphasis for the 2007 growing season and is expected to be complete by fall.

32 Hybrid hazelnut growers have been identified in the upper Midwest, 11 in Wisconsin, representing 43% of current production. Additionally, six of the eight growers missed during this inventory are from Wisconsin. Several of the Wisconsin growers are already members of some other type of grower's cooperative, so collaboration between producers is not out of the question. Efforts are underway to begin organizing these producers in order to address future needs.

Most importantly, what needs to occur is for the process of breeding, cultivar selection and mass propagation of superior cultivars to be institutionalized. Currently there are only three producers of Hybrid Hazelnuts in the region and only two of them are actively involved in hazelnut breeding. Both of the breeding operations (Badgersett Research Inc and Forest Agriculture Enterprises LLC) are primarily dependent on the work of one individual breeder. In order for plant improvement work to continue beyond these individual's lifetime, the work of crop improvement needs be embraced by the University and Extension system. Efforts to do this are underway and will continue. Interested individuals at the University of Minnesota, St Paul, the Center for Integrated Natural Resources and Agricultural Management (CINRAM) in St Paul, as well as collaborators at the University of Wisconsin Stevens Point and Madison have recently begun personal conversation, e-mail correspondence and teleconferencing with UW Extension agents to address this issue.

The top priority for this collaborative effort is to find the overyielding individuals in the existing hybrid hazelnut population and to systematize their mass reproduction. If these efforts are funded and proceed at once, hazelnut production in the upper Midwest could expand exponentially within the next five years.

Until the time that the superior cultivars are discovered and mass-produced, growers can continue to plant seedlings.

In order to maximize potential returns, growers should select seedlings with high survival rates, and should concentrate on direct-to-consumer sales. According to the yield data collected, growers can reasonably expect to gross between $434.62 and $724.36 per fully-stocked acre within five years, if they sell direct to the consumer. The lower figure represents the return on an acre planted with 840 plants and the higher number represents the potential return on an acre with 1400 plants.

By fall of 2007, it is expected that the existing hazelnut cracker will become available in order to crack nuts from any number of growers. The shell and kernal separation system is being worked on at this time and will hopefully be operation by then. Value-added sales of hazelnut kernels represent the highest return per acre to the hazelnut grower. On a fully stocked acre of hybrid hazelnut seedlings, a grower can reasonably expect to gross between $981.98 and $1,636.64 per acre, based once again on the planting density. Despite the fact that cultivars are not currently available and may not be for some time, growers of seedling hybrid hazelnuts can still expect a reasonable return per acre.

An additional reason to grow seedlings is to be actively involved in cultivar selection. Growers of seedling hazelnuts are managing the genetic laboratories where new individuals are field tested. A superior cultivar found in ones seedling planting is potentially another source of revenue in the form of sales of cuttings, tissue-cultured plants or royalties from sales.

The hazelnut industry in Wisconsin and the upper Midwest has almost arrived.

Appendix 1

Commercial Hazelnut Development Project: Production Analysis Five Years after Establishment

by

C. Blaine Schoenhard III
UW Stevens Point Undergraduate

Final Report
Research Conducted on Behalf of The
Wisconsin Department of Agriculture, Trade and Consumer Protection

January 31, 2007

ABSTRACT:

Domestic production and consumption of Bio-Diesel in the United States has dramatically risen in the past decade. This has been an effective approach to reducing the use of petroleum based diesel fuels, but the use of annual crops (such as soybeans) during production render no economic or energy savings during consumption. The use of perennial crops, such as hazelnuts, could reduce long-term economic cost and increase energy savings during Bio-Diesel production and consumption. Before hazelnuts can be considered a sustainable, soybean substitute, there is the need to determine background information pertaining to survival after establishment, required inputs and output potential. By using a stratified sampling procedure, utilizing a K-th value, the plantation output potential was assessed in pounds of raw nut meat. Survival of hazelnut shrubs was determined to be extremely low which its effects can be seen in the low output production of raw nut meat. It is evident that there are minimal inputs required to raise hazelnuts. If more research into establishment and management techniques can lead to increased survival rates, nut output production will coincide, making the use of hazelnuts during bio-diesel production, a viable and economically efficient alternative to soybeans.

INTRODUCTION

In an era of foreign oil dependence, many Americans are questioning why we are dependant on foreign petroleum if we have the capability of making domestically produced, sustainable, green fuels. Yes, ethanol and Bio-Diesel are 'green fuels', but they're not energy or economically efficient to produce. (Pimental, 2003) The green fuel Bio-Diesel has proven that it could help reduce the consumption of petroleum based diesel fuel in America; unfortunately, it is not produced in a sustainable fashion. Although present day Bio-Diesel usage is a grand alternative to petroleum consumption, its source, the annual soybean, requires excessive inputs, high maintenance and poses considerable onsite environmental issues during crop production. In addition, soybeans are a federally subsidized commodity and it is not known if the crop would be grown in sufficient quantities if it did not receive annual, federal support. For these reasons, increased research into perennial oil crops, and heightened interest on behalf of Bio-Diesel investors/producers, has been observed.

For the past several years, the hazelnut shrub, particularly the oil from their nut, has been a major focus as a possible soybean oil substitute during bio-diesel production. This is for several reasons: hazelnut shrubs are perennial, require minimal maintenance/inputs and the nuts contain high oil quantities. A determination of the potential nut meat production outputs of a hazelnut plantation and associated inputs must be determined if hazelnut oil can be utilized as a perennial source of domestically produced Bio-Diesel.

Mark Shepard (Forest Agriculture Enterprises LLC) has established and actively manages a large scale hazelnut plantation in efforts towards "The Commercial Hazelnut Development Project" (CHDP). (Shepard, 2001) This project has been in operation since 2000. The CHDP aims to establish a commercial scale hazelnut plantation while collecting establishment and growth data as the plantation matures. Mr. Shepard has recorded many observations such as how many hazelnut tube-lings were planted, the cost of establishment, and all inputs that were subjected to his plants. Now that the hazelnut tube-lings have had five years to mature, it is imperative to quantify their nut meat production potential. To date, the potential output of a Midwestern hazelnut plantation is unknown.

The purpose of this study is to determine the percent plant survival since establishment and nut meat production output of the five year old hazelnut plantation. Project "PJ Haze" was conducted by C. Blaine Schoenhard III from June 1, 2006 to February 2007, in efforts toward determining a survival percentage for selected parcels within the New Forest Farm hazelnut plantation and designing a statistical sampling procedure to collect nut output data.

Methods

All data was exclusively collected with the permission of Mr. Shepard at New Forest Farm. Data collection consisted of three plantation parcels (sampling frames) on the farm totaling approximately 12 acres. The three parcels are as follows: Savannah with an aspect to the east, New Spot with an aspect to the west/north west, and Across from Three Oak with an aspect to the south. Hybrid hazelnut tube-lings were purchased from Badgersett Research Farm and planted using an Ellis vegetable transplanter. Row spacing alternated between 10 feet and 15 feet with 3 feet between each plant.

Research was conducted in three phases. Total plant survival was determined in phase one, nut production per plant was determined in phase two and nut meat production in phase three.

Phase one survival counts were completed in June of 2006 for each hazelnut plantation parcel at New Forest Farm (although only the above specified plantation parcels will be included in this paper). A count ticker was used during survival count data collection. For each plantation parcel, each hazelnut row was labeled in my log book and on the ground, and then I walked each row in a systematic order, counting each individual living plant. At times it would be difficult to distinguish one plant from another, requiring me to kneel down and place my hands around a plants' grouping of stems coming from the soil. Using this technique, and knowing the approximate spacing between each plant, allowed me to precisely isolate, and count each individual shrub. All plants per row were tallied and total plants for all rows were added up to determine the total living plants in a particular plantation parcel. Establishment survival rate was determined by dividing the known number of present day living shrubs per plantation parcel by the total number of shrubs that were planted, multiplied by 100. This quantifies a total percentage of shrubs that survived establishment.

Phase two involved the selection of plants to be studied and their nut collection. Present day hybrid hazelnut shrubs do not ripen uniformly; therefore time spent collecting ripe nuts may take several weeks. I devised a sampling system to adequately represent the production potential of a hazelnut plantation, taking into account the plantations' layout and associated characteristics. The system is described below:

-Sampling System: Non-Spatial Sampling
-Sampling Approach: Systematic Sampling
-Sampling Design: Probability Sampling
-Population: Total Hazelnut Plants Planted
-Target Population: Surviving Hazelnut Plants
-Operational Sampling Frame: Each Separate Plantation Parcel

This procedure assured ease of data collection, a truly random/reliable quantification, an accurate representation of the plantation's production potential, and ease of reproducibility. The sampling system was designed to best accommodate the type of data collection necessary to produce a non-biased representation of nut production.

After collecting plant survival data, I had a population from which working sample sizes and data collection starting points could be determined. Because there has been no previous research done on this topic, I had no standard deviation to use in determining a representative sample size, therefore I arbitrarily chose what I thought to be a representative sample size for each sampling frame: the Savannah site had a 248 plant (30% of population) sample size, the New Spot site had a 310 plant (26% of population) sample size, and Across From Three Oak had a 277 plant (29.7% of population) sample size. Using these sample sizes, I calculated a K-th value sampling interval to use in each sampling frame.

Using the "random" function in excel, I used each site's total population to determine a random number within the sampling frame, representing a starting point for data collection. I counted each plant in each row until I reached the randomly selected starting point plant, and tied a colored survey ribbon to that plant. From there, I systematically walked each row selecting each K-th value plant. (see Figure 1) After each selected plant was marked and identified, nut collection began.

During nut collection, I walked each row and picked all the nuts off of selected ripe plants, logging how many nuts were picked from each selected shrub and it's associated ID. Nuts were placed into one gallon plastic bags and then transferred into 50lb onion sacks. After one shrub's nuts were collected, I would strip the survey tape off, signifying that the data for that plant had successfully been collected. Any shrubs that were not ready for picking, I would mark the survey tape with their plant ID and log the shrub ID w/ its associated row in my log book. This indicated that the plant was not ripe during the first session of nut collection and required a re-visit nut collection date (it is important to note that picking un-ripe nuts can cause damage to the plant). This process of data collection was repeated for each sampling frame. After the completion of session one nut collection, there were many shrubs that remained to be sampled. These remaining selected shrubs were given twelve days to mature. After this time period, session two data collection began. Session two focused toward collecting all remaining nuts, on selected shrubs, that were not ripe during session one nut collection. The same data collection procedure as mentioned above was used.

Phase three shelled hazelnut cracking and raw nut mass determination was completed in early January 2007. The nuts collected were stored for four months in the rafters of a non-temperature controlled shed. This was done to enable their husks to dry, become brittle and deter small rodents, in particular mice, from stealing/consuming the hazelnuts.

Attaining de-shelled hazelnuts requires a three step process: husk removal, the separation of shelled hazelnuts from detached husks and the cracking of the shells. Step one exclusively removes the husks. This was done by running the hazelnuts with their intact, dried husks, through a de-husking machine which was fabricated by Mr. Shepard and some of his associates. This machine presses the husked hazelnuts against a metal grate, which for the most part, strips the husks from the shell. This machine efficiently removes the husks from the shells but does not efficiently separate the two. Therefore, step two involves the manual separation of the shelled hazelnuts from the detached husks. By placing the shelled hazelnuts and husk fragments on a piece of plywood angled at 40 degrees, gravity allows the shelled hazelnuts to roll down the plywood sheet while the husks stay relatively stationary, enabling a reasonably efficient, manual process of shelled hazelnut and husk separation. Step three takes the shelled hazelnuts and runs then through a hazelnut cracker. This cracker thrusts the hazelnuts against a stationary wall where the force of the propelled hazelnut causes the shell to break apart. Presently, there is no known way to efficiently separate the hazelnuts from their cracked shells.

An additional operation and calculation was added to this project in efforts to determine/project the total output of hazelnuts and hazelnut meat pr parcel. The first operation counted how many shelled hazelnuts, on average, made up a pound. Several one pound (453.6g) bags of shelled hazelnuts were weighed on a digital scale and counted. The average number of shelled hazelnuts per pound was then determined. This will be essential information when projecting how many total pounds of hazelnut meat is produced per hazelnut parcel. The added calculation determined a ratio of shell to nut mass. By weighing a given number of shelled hazelnuts (say a pound) before and after shelling, a ratio of shell to hazelnut mass can be determined. This will be very useful when projecting how much nut meat an acre of plants could produce.

Results

A total of 10,478 shrubs were planted in 2001 during the establishment of these three plantation parcels. As of the 2006 summer, 3,567 plants were living, quantifying a 34% survival rate for Badgersett Research Farm hazelnut tube-lings, at this particular site. (see Appendix I) As for each parcel: the Savannah site had a total population of 823 plants, 1,811 plants at the New Spot parcel and 933 plants at Across From Three Oak.

Parcel Across From Three Oak hosted a mean total of 37.6 nuts per plant and a mean cumulative production projection of 54.8 lbs raw nut meat. (see Appendix II) Parcel New Spot produced a mean 51.7 nuts per plant and a mean cumulative production projection of 146 lbs raw nut meat. (see Appendix III) The Savannah parcel hosted a mean 11 nuts per plant and a mean cumulative production projection of 13.5 lbs raw nut meat. (see Appendix IV) The target population produced a projected mean total of 215 lbs raw nut meat.

On average, 240 shelled hazelnuts equals' one pound. After cracking several pounds of shelled hazelnuts, I found that of each shelled nut, 37.5% is actual raw nut meat. Determining the number of nuts per pound and their nut meat mass enabled me to project the total production potential for the three study parcels.

Discussion

Survival of planted hazelnut shrubs seems to be an issue. To date there is no data supporting one planting procedure over another. It does seem that there is ample room for the improvement of planting procedures and/or post planting management of hazelnut tube-lings. A 34% survival rate of planted Badgersett hybrid hazelnut tube-lings is extremely low and efforts should be put forth to study different types of planting and management strategies in efforts to increase post-establishment survival. To date, Mr. Shepard distributes his own hazelnut shrubs that seem to have suitable survival rates, much higher than the 34% seen in this research. These hazelnut shrubs are one year old, field-grown bare-root-dormant nursery stock.

Over my summer travels, I visited many Midwestern hazelnut growers in efforts towards determining not only how many hazelnut shrubs were living in the Tri-States but also what types of pre-establishment/post establishment management techniques correlated with high survival of planted hazelnut shrubs. Two relatively successful pre-establishment techniques were observed: using herbicide to kill green material (representing planting rows), then the use of a traditional tree transplanter to plant directly into the soil or the disking/tilling of strips in the soil, preparing a loose, fluffy planting medium. Post-establishment management techniques encompass the protection of the plant from predation and the reduction of local vegetation competition during the first year of growth. Additionally, if the soil remained wet, either from precipitation or manual watering, within the first year of growth, correlated with a spring planting session, high survival rates were typically observed.

Since the summer of 2005, experimental breeding techniques have been implemented. The collection of high output cultivars across the Midwest have taken place in efforts towards accumulating genetically superior plant material and establishing it. Tissue cultures have also been collected in efforts to clone specific genetically superior plant material.

The 215 lb projected raw nut meat output seems quite low and may coincide with two similarities observed in the data. A high mortality of planted hazelnut tube-lings decreased the availability of plants to host fruit, decreasing potential raw nut production. In addition, many plants in the population bore no nuts. Nearly fifty percent of the shrubs in the operational sampling frame bore no fruit. Barren plants could have been caused by several factors: Big Bud Mites may have eaten the hazelnut buds, destroying the plants ability to produce that year's fruit. Some plants may have been damaged post-establishment or improperly planted during establishment,

reducing the plants ability to burgeon a root system capable of supporting healthy growth. The genetic characteristics of the plant stock may not be predisposed to cropping practices. Or, some plants just did not have the opportunity to mature at the same rate as its neighboring plants. Either way, it was evident in the field, that there are many plants that did not, nor ever will produce nuts.

Previously observed patterns do not present an optimistic starting point for mid-west hazelnut producers. It could be inferred that growers may face production problems, some of which are out of the growers' control. Tactical establishment and management strategies can be attained with trial and error, but some plants seem to lack the genetic characteristic or opportunity to reach a maturity level enabling the bearing of fruit.

A typical, non-mechanically harvested hazelnut plantation establishment project, such as this, aims at establishing a plantation supporting an average of 840 plants per acre. (If mechanically harvesting hazelnuts, 1400 plants per acre would be planted, 3 foot row spacing with 10 feet between rows). In this case, my sample population of 835 selected plants represents a hypothetical acre of hazelnuts. Of that population, at a 34% survival rate, only 284 plants survived. In addition roughly half of the population bore no fruit! Cumulatively, about one fifth of the planted population will actually bear fruit, which will not be produced for at least two years after establishment. A total raw nut mean production output of 7.4 lbs would be expected in this hypothetical acre of hazelnuts.

Hazelnut production may seem like a sketchy investment, but if survival could be improved, production could potentially compete with soybeans. It is true that an acre of soybeans may out-produce (by mass) an acre of hazelnuts, but raw hazelnut meat has been estimated to contain 60% (+/- 3%) oil, well over double the oil content of a soybean. (Ebrahem, Richardson, Tetley, Mehlenbacher, 1994) If the problem of low survival after establishment could be corrected, hazelnuts could have a real potential of becoming a soybean supplement during Bio-Diesel production.

There are many benefits to growing perennial hazelnuts shrubs rather than soybeans as an oil crop. Soybean production requires the disruption and compaction of soil annually. Several trips across a field are necessary to spread fertilizers, pesticides and herbicides, harvest the crop and prepare the soil for the next year's crop. Knowing that high inputs bring a high cost of production, producing a green fuel using high input, annual crop products is not a sustainable practice. With all of these required inputs for annual crop production, and relatively no required inputs for perennial crop production, it makes sense to search for a perennial crop, such as hazelnuts, which can compete with the outputs of a soybean acre. Hazelnut production requires very few inputs, conserves soil and helps revert agricultural lands back to functioning ecological habitats. Other than a one-time soil prep before planting, hazelnuts prefer the reduction of local plant competition during growth. This is not to be taken as the elimination of all competition around a plant but simply mowing along a row of hazelnuts. Some growers believe that hazelnut shrubs require fertilization but ongoing research has not supported this notion.

It is evident that hazelnut production has its benefits but also some drawbacks. The crop can be produced in an economically and environmentally sustainable fashion that requires relatively no chemical inputs, greatly reducing fuel and chemical costs. Unfortunately, at this point, output production seems low. With the finding that only a fraction of an acre's planted plants produced nuts, it seems that there is still more research needed to reach establishment and management techniques that can increase plant survival and make the raising of hazelnut shrubs an economically viable replacement to soybean consumption during Bio-Diesel production.

LITERATURE CITED

Ebrahem, K.S., Richardson, D.G., Tetley, R.M. and Mehlenbacher, S.A. "Oil Content, Fatty Acid Composition, and Vitamin E Concentration of 17 Hazelnut Varieties, Compared to Other Types of Nuts and Oil Seeds". Acta Hort. (ISHS) 1994. http://www.actahort.org/books/351/351_76.htm

Lilley, Sasha. "Green Fuel's Dirty Secret" CorpWatch (June 1, 2006) : 25 pars. October 2, 2006 http://www.corpwatch.org/article.php?id=13646.

Mark Shepard. "Commercial Hazelnut Development Project". Southwest Badger Resource Conservation & Development Council, Inc. 2001

Pimentel, David. "Ethanol Fuels: Energy Balance, Economics, and Environmental Impacts are Negative." Natural Resources Research 12.2 (June 2003) : 127-134

Appendix 2

Hazelnut Research Project 2006

Research done on behalf of the
WI Dept. of Agriculture, Trade, and Consumer Protection

C. Blaine Schoenhard III
UW Stevens Point Undergraduate

Outline of This Document

Name:
Location:

Hazelnut Planting/s Background

Year of Planting/s:
Total Plants Planted:
Total Plants in the Ground:
Total Plants Bearing Nuts:
Percent Survival:

Hazelnut Supplier:

Re-Plantings:

Soil or Plant Inputs

Previous Land Use:
Fertilizers Used:
Pest Control Methods:
Irrigation/Watering Methods:
Herbicide Used:
Method of Soil Preparation:

Notes:

Name: Don Smith
Location: Crawfordsville, IA

Hazelnut Planting/s Background

Year of Planting's: 1993, 1999, 2000
Total Plants Planted: Unknown
Total Plants in the Ground: 80
Total Plants Bearing Nuts: 6
Percent Survival: Undeterminable

Hazelnut Supplier: 1993 plants, Badgersett Research Corp.
1999 and 2000 plants, Red Fern Farm
Re-plantings: The Red Fern Farm Hazels are the Replacements plants.

Soil or Plant Inputs

Previous Land Use: Non-Ag
Fertilizers Used: None Used
Pest Control Methods: None
Irrigation methods: Hand Waters
Herbicide Used: Roundup, for planting prep. and weed control
Method of Soil Prep: Unknown

Notes:
-Some of the hazels have been mulched, all have been mowed around.
-Deer browse has been observed yearly.

Name: Tom Wahl
City/State: Wapello, IA

Hazelnut Planting/s Background

Year of Plantings: 1993, 2000
Total Plants Planted: Unknown
Total Plants in the Ground: 84
Total Plants Bearing Nuts: 27
Percent Survival: Undeterminable

Hazelnut Supplier: Badgersett Research Corp. and Red Fern Farm Hazelnuts.
Re-Plantings: The Red Fern Farm Hazelnuts are the re-planting plants.

Soil or Plant Inputs

Previous Land Use: Pasture
Fertilizers Used: Some compost has been used
Pest Control Methods: Plastic protective stem guards
Irrigation/Watering Methods: Occasional watering by hand or tank
Herbicide Used: Yes, during establishment
Method of Soil Preparation: Unknown

Notes:
-Some plants have been mulched and compost has been used.
-Many of the plants have been mowed around.

Name: Anne Patterson
Location: Farmington, IL

Hazelnut Planting/s Background

Year of Planting: 2001
Total Plants Planted: 600
Total Plants in the Ground: 319
Total Plants Bearing Nuts: 4
Percent Survival: 44.8% with the 50 replacements

Hazelnut Supplier: Badgersett Research Corp.
Re-Plantings: Yes, 50 from Badgersett

Soil or Plant Inputs

Previous Land Use: Pasture
Fertilizers Used: Horse Compost
Pest Control Methods: Deer Repellant (recommended in the Hybrid Hazelnut Handbook)
Irrigation/Watering Methods: None
Herbicide Used: None Used
Method of Soil Preparation: Unknown

Notes:
-Plants were watered the first year they were planted.
-The plants are mowed around.

Name: NA
Location: South East, MN

Hazelnut Planting/s Background

Year of Plantings: 1999, 2003
Total Plants Planted: Unknown
Total Plants in the Ground: 6,686
Total Plants Bearing Nuts: approx. 1,200
Percent Survival: Undeterminable

Hazelnut Supplier: Badgersett Research Corp.
Re-Plantings: Red Fern Farm

Soil or Plant Inputs

Previous Land Use: Conventional Ag
Fertilizers Used: Unknown but has used fertilizers
Pest Control Methods: Deer Fence, Hawk Posts
Irrigation/Watering Methods: By Hand and Now Has Drip Irrigation
Herbicide Used: Unknown
Method of Soil Preparation: Unknown

Notes:
-Feels that the 80% mortality rate in the 2003 planting was due to improper planting practices and drought directly caused the high mortality. It is claimed that roots were sticking out of the ground and there was very little water used during the planting.
-The soil was tested and imbalances were correctly adjusted before the planting began.

Name: Dave Bucklin
Location: Windom, MN

Hazelnut Planting/s Background

Year of Planting: 2003
Total Plants Planted: 4
Total Plants in the Ground: 2
Total Plants Bearing Nuts: 0
Percent Survival: 50%

Hazelnut Supplier: Badgersett Research Corp.

Re-Plantings: No

Soil or Plant Inputs

Previous Land Use: Unknown
Fertilizers Used: None Used
Pest Control Methods: Plastic Stem Guard
Irrigation/Watering Methods: Yes, Hand Watering
Herbicide Used: None Used
Method of Soil Preparation: Unknown

Notes:
-Plants were heavily browsed by rabbits.

Name: Roy Cerling
Location: Wykoff, MN

Hazelnut Planting/s Background

Year of Plantings: 1993, 1997, 1998
Total Plants Planted: 2,500 (estimate only)
Total Plants in the Ground: 1180
Total Plants Bearing Nuts: 85% of Population
Percent Survival: Undeterminable

Hazelnut Supplier: Badgersett Research Corp.

Re-Plantings: 8 Replantings of 25 plants or more

Soil or Plant Inputs

Previous Land Use: Ag
Fertilizers Used: Manure and Conventional Ag Fertilizers
Pest Control Methods: Poison for Gophers
Irrigation/Watering Methods: Manually Watered New Plants and in Dry Years
Herbicide Used: Used During Plant Establishment
Method of Soil Preparation: Unknown

Notes:
-Fertilizers were not used on a yearly basis.

Name: Noren Durheim
Location: Madelia, MN

Hazelnut Planting/s Background

Year of Planting: Unknown
Total Plants Planted: 30
Total Plants in the Ground: 7
Total Plants Bearing Nuts: Unknown
Percent Survival: Undeterminable

Hazelnut Supplier: Arbor Day Foundation

Re-Plantings: Yes

Soil or Plant Inputs

Previous Land Use: Unknown
Fertilizers Used: None Used
Pest Control Methods: None Implemented
Irrigation/Watering Methods: Did Manually Water Plants
Herbicide Used: None Used
Method of Soil Preparation: Unknown

Notes:
-Rows are mowed and maintained.

Name: Norm Erickson
Location: Rochester, MN

Hazelnut Planting/s Background

Year of Plantings: Late July, 2004, 2005, and 2006
Total Plants Planted: 5000
Total Plants in the Ground: 2,460
Total Plants Bearing Nuts: 0
Percent Survival: Undeterminable

Hazelnut Supplier: Badgersett Research Corp.

Re-Plantings: Norm grows his own replacements from nuts in a raised bed. He uses 2 parts sphagnum moss and 1 part vermiculite for his growing medium. The nuts are purchased from Red Fern Farm.

Soil or Plant Inputs

Previous Land Use: Ag
Fertilizers Used: 10-10-10 tablets, Hand Injects Super Thrive
Pest Control Methods: Planted Lambsquarter, Red Osier Dogwood and Pussy Willow to draw deer away from the hazelnut plants. Apparently, the deer love browsing on them and browse very little on the hazelnut plants.
Irrigation/Watering Methods: Puts a handful of Hydrogel in each augured hole before the plant is planted and hand waters plants after planting only.
Herbicide Used: Glycophosphate
Method of Soil Preparation: Followed the Hazelnut Handbook recommendations.

Data continued from page 10 (Norm Erickson)
Notes:
-The 2004 planting was done by hand, a conventional tree planter was used in 2005 and the 2006 planting was done with an auger.
-The 2005 planting of 3000 was a failure with an estimated 25% survival. Norm if confident that the high mortality was due to a late July planting in 90 degree temperatures during a period of drought.
-Claims that it is very easy to grow replacement plants from nuts in his raised bed.
-Uses mulch around some plants to reduce weed competition and retain water.
-Norm disturbs the soil about every 3 weeks to reduce weed growth. It is Bare Black-Dirt Earth exposed in-between each row. The field looks very similar to a conventional corn field.
-Believes that the planted Red Osier Dogwood, Pussy Willow and Lambsquarter is 98% effective in reducing deer browse on the hazelnuts.
-Cover crops are currently being experimented with to use in-between hazelnut rows.
-Although some rows had very high survival, many other rows had almost no survival showing a handful of plants living within a row.
-Augured plants get one gallon of water when planted (to help the soil surround the roots.

Name: Dennis Gibson
Location: Central MN

Hazelnut Planting/s Background

Year of Planting: Didn't Know
Total Plants Planted: Unknown
Total Plants in the Ground: 200+
Total Plants Bearing Nuts: Most are Bearing Nuts
Percent Survival: Undeterminable

Hazelnut Supplier: Badgersett Research Corp. and Bill Smith
Re-Plantings: No

Soil or Plant Inputs

Previous Land Use: Ag
Fertilizers Used: Yes
Pest Control Methods: None Implemented
Irrigation/Watering Methods: None
Herbicide Used: Transline
Method of Soil Preparation: Unknown

Notes:
-Soil is poorly drained.
-The rows in between the plants is disked regularly.
-Total Plants in ground data was contributed by Lois Braun,

Name: James Heaser
Location: Altura, MN

Hazelnut Planting/s Background

Year of Planting's: 1999, 2006
Total Plants Planted: 150
Total Plants in the Ground:
Total Plants Bearing Nuts:
Percent Survival:

Hazelnut Supplier: Badgersett Research Corp.
Re-Plantings: Re-plants Annually

Soil or Plant Inputs

Previous Land Use: Unknown
Fertilizers Used: None Used
Pest Control Methods: None Implemented
Irrigation/Watering Methods: None
Herbicide Used: None Used
Method of Soil Preparation: Unknown

Notes:
-None

Name: Mark Schrobrich
Location: Hutchinson, MN

Hazelnut Planting/s Background

Year of Planting: 2002
Total Plants Planted: 289
Total Plants in the Ground: 213
Total Plants Bearing Nuts: None
Percent Survival: Undeterminable

Hazelnut Supplier: Badgersett Research Corp.

Re-Plantings: None

Soil or Plant Inputs

Previous Land Use: Ag
Fertilizers Used: Chicken Manure in 2006
Pest Control Methods: Plastic Stem Gaurds
Irrigation/Watering Methods: Manually, when Dry
Herbicide Used: None Used
Method of Soil Preparation: Unknown

Notes:
-High competition with sod grasses.
-Harvests alfalfa in between the rows of hazels.

Name: Carol Jacobs
Location: Winona, MN

Hazelnut Planting/s Background

Year of Planting: Unknown
Total Plants Planted: Unknown
Total Plants in the Ground: None
Total Plants Bearing Nuts: None
Percent Survival: NA

Hazelnut Supplier: Badgersett Research Corp.

Re-Plantings: None

Soil or Plant Inputs

Previous Land Use: Unknown
Fertilizers Used: None Used
Pest Control Methods: None
Irrigation/Watering Methods: Plants Were Not Watered
Herbicide Used: None Used
Method of Soil Preparation: Unknown

Notes:
-Deer browse killed all of the hazels.

Name: Jeff Jensen
Location: Fairmont, MN

Hazelnut Planting/s Background

Year of Planting: April, 2005
Total Plants Planted: 551
Total Plants in the Ground: 465
Total Plants Bearing Nuts: 0
Percent Survival: 75%

Hazelnut Supplier: Badgersett Research Corp. and Red Fern Farm Plants
Re-Plantings: Yes, 48 Plants

Soil or Plant Inputs

Previous Land Use: Ag
Fertilizers Used: Yes
Pest Control Methods: None
Irrigation/Watering Methods: Waters Manually with a Tank
Herbicide Used: Yes, Roundup
Method of Soil Preparation: Roto-Tilled soil for Badgerset plants. Used an ice fishing auger for Red Fern Farm plants.

Notes:
-There was evidence of rabbit browsing.

Name: Jim and Erica Kelly
Location: Elgin, MN

Hazelnut Planting/s Background

Year of Planting: 2002
Total Plants Planted: 500
Total Plants in the Ground: Unknown
Total Plants Bearing Nuts: 0
Percent Survival: Less than 15%

Hazelnut Supplier: Badgersett Research Corp.
Re-Plantings: Yes, 150 total plants re-planted

Soil or Plant Inputs

Previous Land Use: Unknown
Fertilizers Used: Yes
Pest Control Methods: None Implemented
Irrigation/Watering Methods: Water Plants by Hand
Herbicide Used: None Used
Method of Soil Preparation: Unknown

Notes:
-Rows are mowed.

Name: Ken Lubahn
Location: Wykoff, MN

Hazelnut Planting/s Background

Year of Plantings: 1993, 2nd planting-unknown year
Total Plants Planted: Unknown
Total Plants in the Ground: 12
Total Plants Bearing Nuts: 2
Percent Survival: Undeterminable

Hazelnut Supplier: Badgersett Research Corp.
Re-Plantings: No

Soil or Plant Inputs

Previous Land Use: Non-Ag
Fertilizers Used: Chicken Manure (1 application)
Pest Control Methods: None Implemented
Irrigation/Watering Methods: Hand Watered Plants
Herbicide Used: None Used
Method of Soil Preparation: Unknown

Notes:
-The plants were given to Ken from Roy Cerling.
-The second planting was from nuts produced by his first plants planted.

Name: Michael McNeal
Location: NA

Hazelnut Planting/s Background

Year of Planting: Unknown
Total Plants Planted: Unknown
Total Plants in the Ground: 286
Total Plants Bearing Nuts: All of Them
Percent Survival: Undeterminable

Hazelnut Supplier: Unknown
Re-Plantings: 56 Plants Re-Planted

Soil or Plant Inputs

Previous Land Use: Ag
Fertilizers Used: Unknown
Pest Control Methods: None Implemented
Irrigation/Watering Methods: No Plant Watering
Herbicide Used: No
Method of Soil Preparation: Tilled the ground, and then placed a black plastic tarp down to control weeds.

Notes:
-Certified Organic

Name: Dave Minar
Location: New Prague, MN

Hazelnut Planting/s Background

Year of Planting: May, 2001
Total Plants Planted: 1500
Total Plants in the Ground: Unknown
Total Plants Bearing Nuts: Unknown
Percent Survival: Undeterminable

Hazelnut Supplier: Badgersett Research Corp.
Re-Plantings: Yes

Soil or Plant Inputs

Previous Land Use: Unknown
Fertilizers Used: None Used
Pest Control Methods: None Implemented
Irrigation/Watering Methods: Hand Watered the Plants Once
Herbicide Used: Yes, to prep the planting site
Method of Soil Preparation: Unknown

Notes:
-Roundup and fabric have been used to control the weeds and grasses.

Name: Donald Moritz
Location: Fairmont, MN

Hazelnut Planting/s Background

Year of Planting: June, 2005
Total Plants Planted: 1140
Total Plants in the Ground: 104
Total Plants Bearing Nuts: 0
Percent Survival: 9%

Hazelnut Supplier: Badgersett Research Corp.
Re-Plantings: No

Soil or Plant Inputs

Previous Land Use: Ag
Fertilizers Used: Unknown but Probably Not
Pest Control Methods: Yes
Irrigation/Watering Methods: Only After Plants were Planted
Herbicide Used: No
Method of Soil Preparation: Unknown

Notes:
-Donald lost over 90% of his Badgersett plants so he is going to use Red Fern Farm hazelnut plants to replace the dead Badgersett hazels.
-Many plants looked choked out by heavy clover.
-The area is not mowed.

Name: John Munter
Location: Warba, MN

Hazelnut Planting/s Background

Year of Plantings: 1992, 1994, 2000
Total Plants Planted: Unknown
Total Plants in the Ground: 143
Total Plants Bearing Nuts: 37
Percent Survival: Undeterminable

Hazelnut Supplier: Badgersett Research Corp.
Re-Plantings: No

Soil or Plant Inputs

Previous Land Use: Lawn
Fertilizers Used: Alpaka Manure
Pest Control Methods: None Implemented
Irrigation/Watering Methods: Waters Plants by Hand
Herbicide Used: None Used
Method of Soil Preparation: Unknown

Notes:
-John has cut hazelnut roots out of the ground and transplanted them with very successful results.
-John also germinates his own nuts and plants them.

Name: Norm Penner
Location: Rochester, MN

Hazelnut Planting/s Background

Year of Plantings: Early June, 2004 and Mid July, 2005
Total Plants Planted: 600
Total Plants in the Ground: 184
Total Plants Bearing Nuts: 0
Percent Survival: Undeterminable

Hazelnut Supplier: Badgersett Research Corp.
Re-Plantings: No

Soil or Plant Inputs

Previous Land Use: Ag
Fertilizers Used: Pellets
Pest Control Methods: Hawk Post
Irrigation/Watering Methods: Hand Watered Plants
Herbicide Used: No
Method of Soil Preparation: Unknown

Notes:
-Evidence of deer browsing, rabbits and mice.

Name: Mike Zawislak
Location: Lanesboro, MN

Hazelnut Planting/s Background

Year of Planting: NA
Total Plants Planted: NA
Total Plants in the Ground: NA
Total Plants Bearing Nuts: NA
Percent Survival: NA

Hazelnut Supplier: Badgersett Research Corp.

Re-Plantings: NA

Soil or Plant Inputs

Previous Land Use: NA
Fertilizers Used: No
Pest Control Methods: Has Plants in a Watering Trough
Irrigation/Watering Methods: Waters if Needed
Herbicide Used: None Used
Method of Soil Preparation: NA

Notes:
-Mike is experimenting with stooling his hazelnut plants.

Name: Steve Bertjens
Location: Cuba City, WI

Hazelnut Planting/s Background

Year of Planting: April 2006
Total Plants Planted: 1900 approx.
Total Plants in the Ground: 1,527
Total Plants Bearing Nuts: 0
Percent Survival: 80% approx.

Hazelnut Supplier: Forest Agriculture Enterprises LLC

Re-Plantings: No

Soil or Plant Inputs

Previous Land Use: Prairie/Forest Edge
Fertilizers Used: None Used
Pest Control Methods: Plastic Stem Guards on Some Plants
Irrigation/Watering Methods: None
Herbicide Used: 2lbs of Princept
Method of Soil Preparation: Sprayed the grasses with the princept but only the cool season grasses were killed. After the strips are sprayed, the traditional tree planter was used to plant the hazelnuts.

Notes:
-Attributes much of his survival to a very wet growing season after establishment.

Name: Larry Fickbohm
Location: Ashland, WI

Hazelnut Planting/s Background

Year of Plantings: June 2006 NFF, Mid July 2006 BRC
Total Plants Planted: 425
Total Plants in the Ground: 410
Total Plants Bearing Nuts: 0
Percent Survival: NFF 98%, BRC 82%

Hazelnut Supplier: Forest Agriculture Enterprises LLC and Badgersett Research Corp.
Re-Plantings: No

Soil or Plant Inputs

Previous Land Use: Pasture
Fertilizers Used: Rock Phosphate
Pest Control Methods: None Implemented
Irrigation/Watering Methods: Hand Waters Plants
Herbicide Used: None Used
Method of Soil Preparation: Disked soil dug holes and planted the hazelnuts.

Notes:
-Very little vegetation within the hazelnut plantation.

Name: Jason Fishback
Location: Ashland, WI
Living Forest Cooperative,

Hazelnut Planting/s Background

Year of Plantings: Sept. 2004 and June 2005
Total Plants Planted: Unknown
Total Plants in the Ground: 223
Total Plants Bearing Nuts: 0
Percent Survival: Undeterminable

Hazelnut Supplier: Badgersett Research Corp.
Re-Plantings: No

Soil or Plant Inputs

Previous Land Use: Ag and a Garden Area
Fertilizers Used: None Used
Pest Control Methods: Tubes
Irrigation/Watering Methods: Watered By Hand
Herbicide Used: Yes, during establishment and weed control
Method of Soil Preparation: Cut hay for the 3rd time, then roto-tilled and planted.

Notes:
-Has used large coffee bags to control grass and weed competition.
-Jason stated that in the 2004 planting, the Badgersett hazels had an estimated 29% survival rate.

Name: Beverly Jensch
Location: Red Cliff, WI
Living Forest Cooperative

Hazelnut Planting/s Background

Year of Planting: July 2006
Total Plants Planted: 200
Total Plants in the Ground: 118
Total Plants Bearing Nuts: 0
Percent Survival: 59%

Hazelnut Supplier: Badgersett Research Corp.
Re-Plantings: No

Soil or Plant Inputs

Previous Land Use: Pasture/Ag
Fertilizers Used: None Used
Pest Control Methods: Skid and Dehydrated Cow Blood
Irrigation/Watering Methods: Hand Watering
Herbicide Used: Roundup
Method of Soil Preparation: Roundup was applied, the holes were dug (by hand) and planted the plants.

Notes:
-Some rodent grazing was observed.

Name: Pat Kinney
Location: Ashland, WI

Hazelnut Planting/s Background

Year of Planting: Unknown
Total Plants Planted: 20
Total Plants in the Ground: 19
Total Plants Bearing Nuts: Unknown
Percent Survival: 95%

Hazelnut Supplier: Unknown
Re-Plantings: No

Soil or Plant Inputs

Previous Land Use: Garden
Fertilizers Used: None Used
Pest Control Methods: Fenced Off Plants
Irrigation/Watering Methods: Hand Watered
Herbicide Used: Unknown
Method of Soil Preparation: Dug a water trench and planted next to it.

Notes:
-Plants were planted manually
-I did not get to this site, but talked to the land owner. Pat is willing to plant more in the following years.

Name: Kevin Kihslinger
Location: La Farge, WI

Hazelnut Planting/s Background

Year of Planting: Early June 2006
Total Plants Planted: approx 325
Total Plants in the Ground: 314
Total Plants Bearing Nuts: 0
Percent Survival: 96.6%

Hazelnut Supplier: Forest Agriculture Enterprises LLC
Re-Plantings: No

Soil or Plant Inputs

Previous Land Use: Ag
Fertilizers Used: Broad Cast Soil Correction
Pest Control Methods: Plastic Stem Guards
Irrigation/Watering Methods: None
Herbicide Used: None Used
Method of Soil Preparation: Dug holes and planted the plants.

Notes:
-None

Name: John Shay
Location: Ashland, WI
Living Forest Cooperative

Hazelnut Planting/s Background

Year of Planting: July 2006
Total Plants Planted: Unknown
Total Plants in the Ground: 397
Total Plants Bearing Nuts: 0
Percent Survival: Undeterminable

Hazelnut Supplier: Badgersett Research Corp.
Re-Plantings: No

Soil or Plant Inputs

Previous Land Use: Ag
Fertilizers Used: None Used
Pest Control Methods: Plastic Stem Gaurds
Irrigation/Watering Methods: Hand Watered
Herbicide Used: None Used
Method of Soil Preparation: Used Roundup, then rototilled that fall and in the spring.

Notes:
-Plants were watered every 4 days during the dry periods.

Name: Mark Shepard
Location: Viola, WI

Hazelnut Planting/s Background

Year of Planting/s: 1999, 2000
Total Plants Planted: approx 10,478
Total Plants in the Ground: 3,547
Total Plants Bearing Nuts: Most of the Plants are Producing
Percent Survival: 34%

Hazelnut Supplier: Badgersett Research Corp.
Re-Plantings: No

Soil or Plant Inputs

Previous Land Use: Ag
Fertilizers Used: No Fertilizers Have Been Used
Pest Control Methods: None Implemented
Irrigation/Watering Methods: Plants are not Irrigated
Herbicide Used: None Used
Method of Soil Preparation:

Notes:

Name: Steve & Prudence Tippens
Location: Viroqua, WI

Hazelnut Planting/s Background

Year of Planting: 2002
Total Plants Planted: 1,750
Total Plants in the Ground: 664
Total Plants Bearing Nuts: 0
Percent Survival: 37%

Hazelnut Supplier: Badgersett Research Corp. and Forest Agriculture Enterprises LLC
Re-Plantings: The New Forest Farm plants are the replacements.

Soil or Plant Inputs

Previous Land Use: Ag
Fertilizers Used: Biodynamic Fertilizer and Fish Emulsion
Pest Control Methods: Plastic Stem Guards
Irrigation/Watering Methods: Hand Watered plants
Herbicide Used: None Used
Method of Soil Preparation: The planting site was disked and planted with clover. Immediately following, holes were dug (by hand) and the plants were planted.

Notes:
-Organic Certified
-Rows were mowed
-Due to dense vegetation, I would recommend that a count be done in early spring, when the vegetation is not as thick as in late August.

Name: Dave Varney…One Sun Farm
Location: La Farge, WI

Hazelnut Planting/s Background

Year of Plantings: 2002, 2003, 2004, 2005
Total Plants Planted: Unknown
Total Plants in the Ground: 2,069
Total Plants Bearing Nuts: 30
Percent Survival: Undeterminable

Hazelnut Supplier: Forest Agriculture Enterprises LLC
Re-Plantings: Yes

Soil or Plant Inputs

Previous Land Use: Ag
Fertilizers Used: Some Manure Used
Pest Control Methods: Dogs and Plastic Stem Guards
Irrigation/Watering Methods: None
Herbicide Used: None Used
Method of Soil Preparation: All plants were planted by hand. The planting sites were grown with vegetables for one season and then the hazelnut plants were planted

Notes:
-Dave uses wood mulch (about a 6" layer) around each plant enabling water conservation and weed control. The utilization of mulch is very important. In Amish communities, there is a high amount of waste wood that they do not use. Dave takes a major waste problem in Vernon County and turns it

into a useful tool on his farm. More people should be utilizing the Amish's waste wood.
-One Sun Farm was the most sustainable farm that I visited (with respect to energy conservation/utilization. Within and between the rows of hazelnut plants, Dave grows annual and perennial crops, utilizing as much sun-energy as possible.
-Within the hazelnut rows, Raspberries, Strawberries, and native Elderberry grow in harmony with the hazelnut plants.
-Between the hazelnut rows, many vegetable plants are grown, utilizing limited space and energy.
-Plants grown in-between rows: Garlic (1,400 lbs produced in 2006), Carrots, Cabbage, Corn, Tomatoes, Parsley, Basil, Kele, Chard, Celery, Beats, Green Beans, Potatoes, Onions, Chalets, Peppers, Radishes, Spinage, Lettuce, Cucumbers, Melons, Summer/Winter Squash, and Asparagus.
-One Sun Farm is the most "energy/land conservation" aware farm that I visited.

Name: Sylvester & Ann Weyker
Location: Cedar Grove, WI

Hazelnut Planting/s Background

Year of Planting: June 2002
Total Plants Planted: 600
Total Plants in the Ground: 85 Were Found
Total Plants Bearing Nuts: 0
Percent Survival: NA

Hazelnut Supplier: Badgersett Research Farm

Re-Plantings: Several Replanting

Soil or Plant Inputs

Previous Land Use: CRP Land
Fertilizers Used: 1 Tablet pr Plant in 2006
Pest Control Methods: Plastic Stem Guards
Irrigation/Watering Methods: Only Watered the Day the Plants Were Planted
Herbicide Used: Yes, As Planting Site Prep
Method of Soil Preparation: Followed the guidelines provided in the "Hybrid Hazelnut Handbook"

Notes:
-The grass at this site was chest high and dense. I could only find plants that had a plastic stem guard.
-Deer Browse was observed.

Known growers, not inventoried

Hans/Heidi- Belle Plaine, MN	est 10,000 plants
Don Jones-Wild Rose,WI	est 3,000 plants
Jeanne Herold- Waukesha, WI	est 10,000 plants
_____ -Cambridge,WI	est 1,000 plants
Bob Braun, WI	unknown
John Runde, Lancaster/Platteville	unknown
_____ WI	unknown
Twin Ponds, IL	est 3,000 plants

Possible additional plants: 27,000 plants

The Hazelnut Cracker

Group: Mike Berkland, Mike Maciejewski, Kyle Mueller, Nick Raaum, Nick Ventimiglia

Class: ME 349 – Senior Design with Dr. Elder

Date: May 1, 2006

Outline

- Need for a hazelnut sheller
- How our design works
- Special considerations
- Adherence to PDS
- Possibilities for production
- Questions

Cracking The Hazelnut

Why Hybrid Hazelnuts?

[1]

Environmental Factors:

- Drought, Flood, and Blight Resistant.
- Doesn't Require Annual Planting.
- Very nutritious and energy dense.
- High yields up to 2000lb/acre vs. 1200lb/acre of soybeans.

Economics:

- Current test plots exceed yields of popular soybean crop.
- Increased interest in environmental impacts of farming and the possibility high profits (2000lb/acre@$3/lb vs. 1200lb/acre@$.50/lb. suggest the hybrid hazel market will grow.

Problems with Cracking the Hybrid Hazelnut

- Hybrid hazelnuts produce a very wide variety of nut sizes, shapes and weights.

- These variances give the hybrid hazel its outstanding adaptations and therefore can not be bred out, instead the machinery must adapt to the nuts.

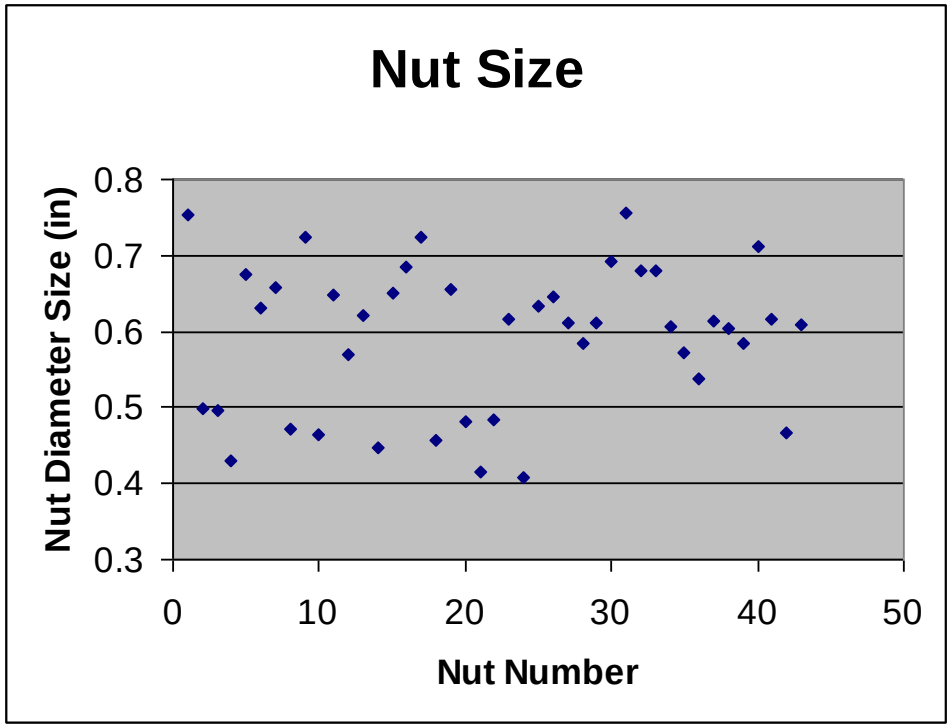

We recorded a diameter range of .4in to 1.2in for a randomized group of 40 nuts.

Problem Statement

Given favorable economic and environmental conditions for Hybrid Hazelnuts we anticipate a growth in small scale hazelnut farmers. Our goal was to develop a hazelnut sheller to meet their needs.

1) 85% Successful cracking rate.

2) Must meet the farmers capacity needs. Based on calculations the product must process 200lbs of hazelnuts per hour.

3)The cost of the sheller should be < 10% of the farmers' income from 1 year's production. We estimate this percentage to be about $12,000.

Our Design

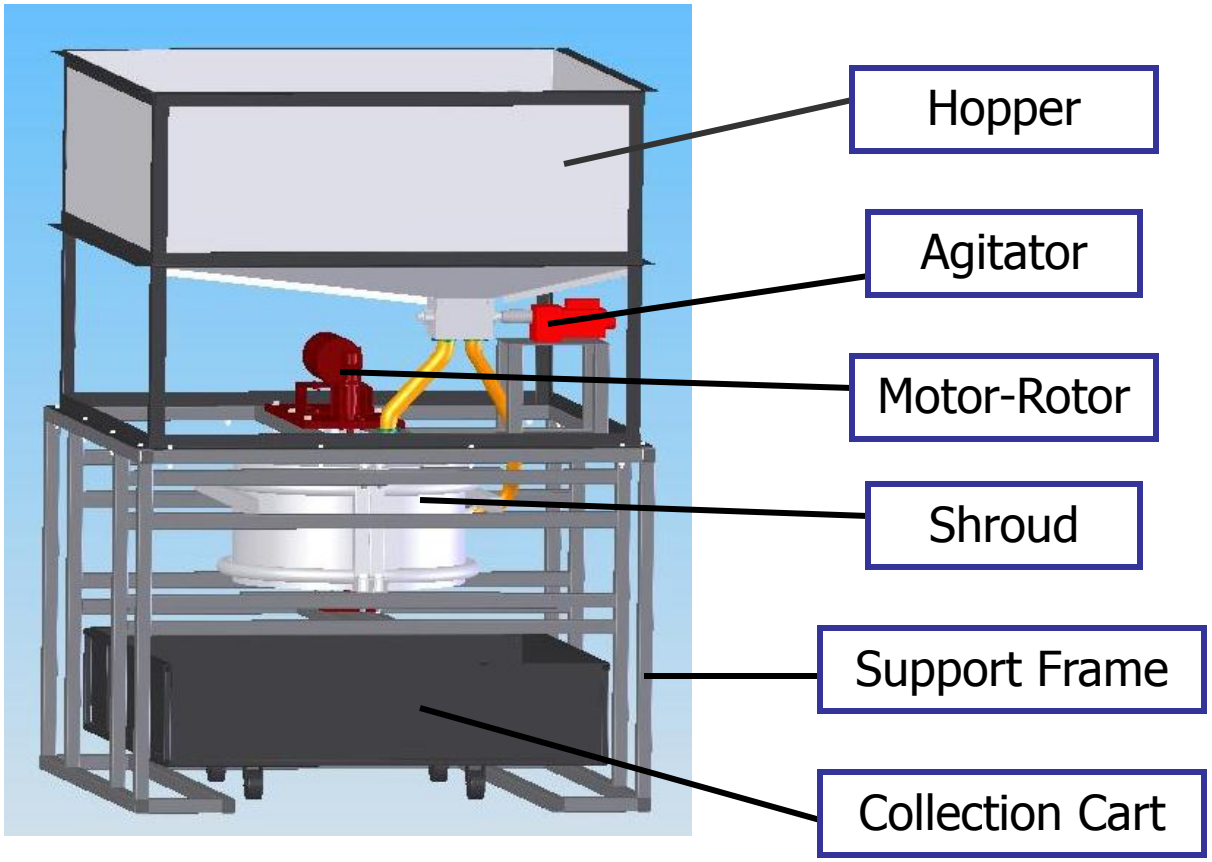
Hopper
Agitator
Motor-Rotor
Shroud
Support Frame
Collection Cart

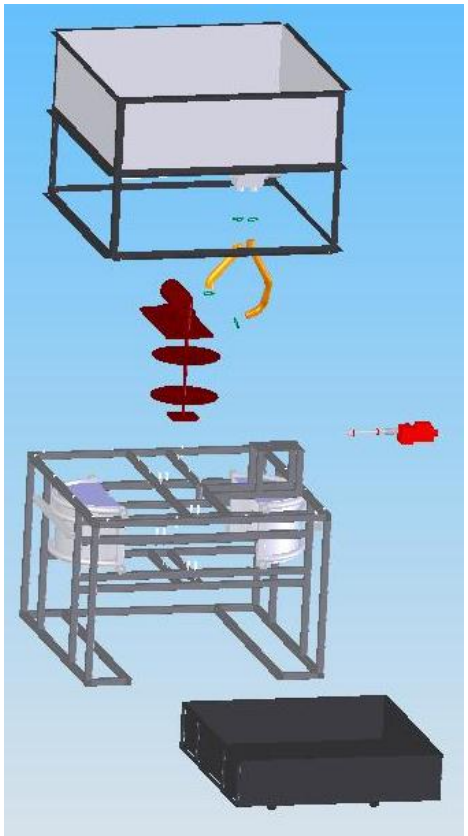

How It Works

The Hopper feeds the un-cracked nuts into the rotor blades at an approximate feed rate of **9 nuts/sec**. The agitator motor rotates at **7.2 rpm**.

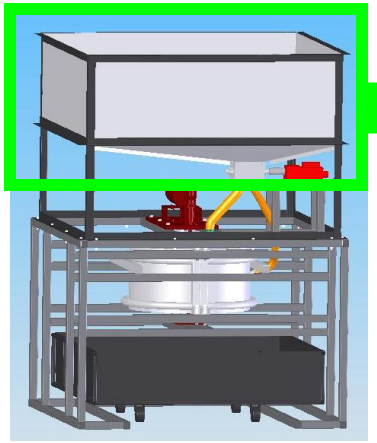

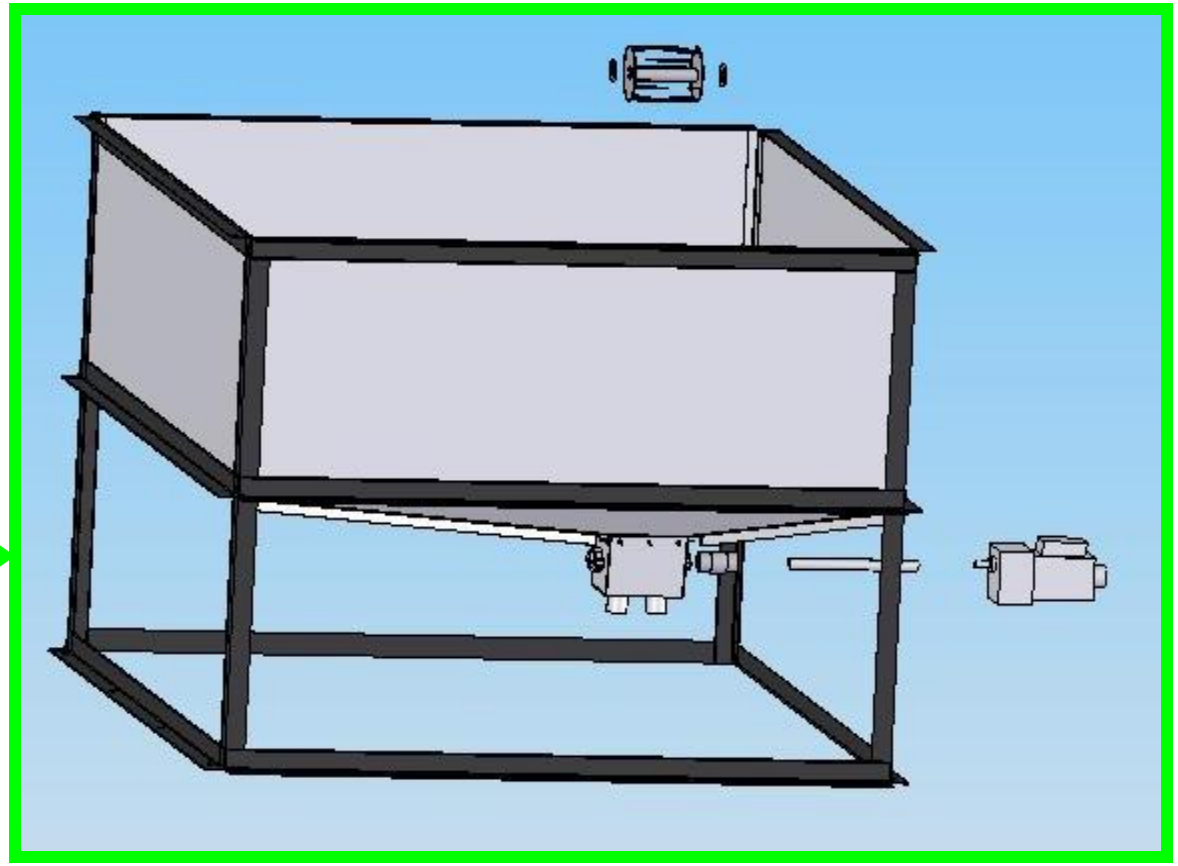

How It Works

The nuts are dropped onto the rotors which rotate at **1750 rpm**. They are then thrown against the impact surface where cracking occurs.

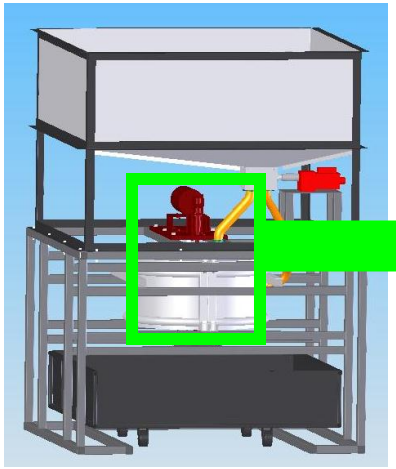

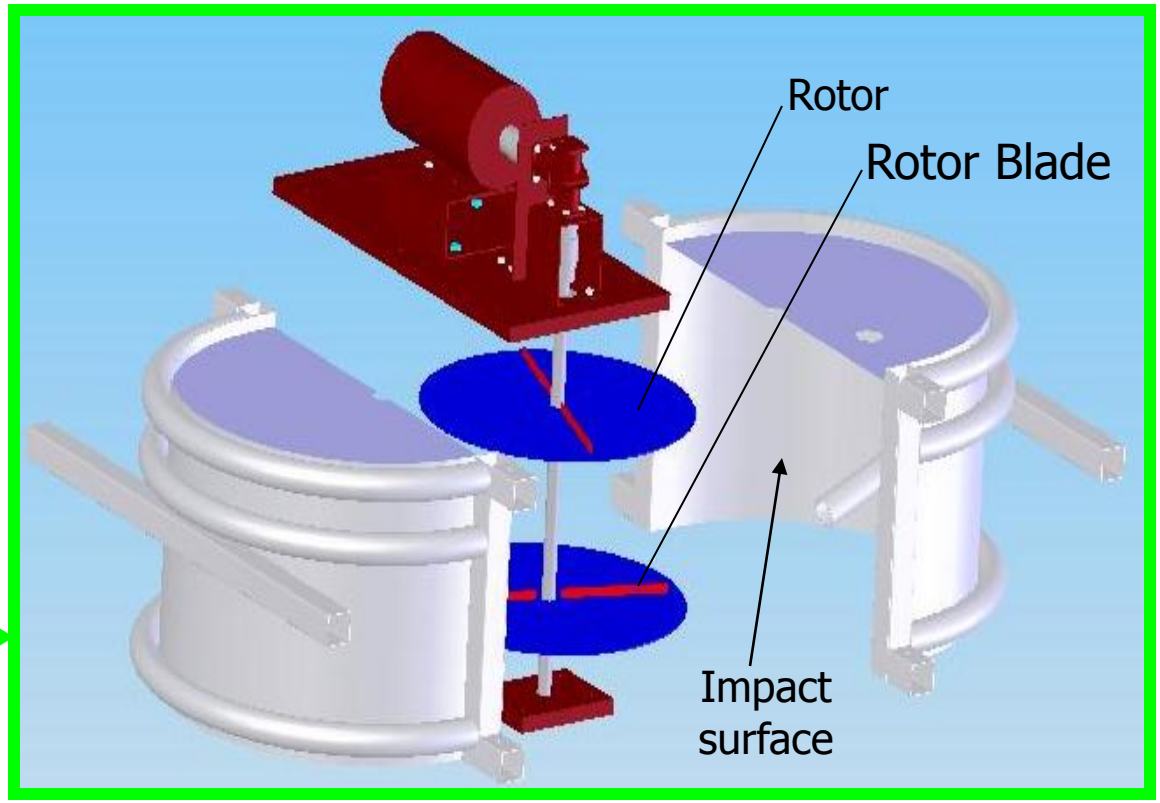

How It Works

(Cracked nuts from test setup)

After the nuts impact the shroud and crack they fall into a collection bin. The collection bin sits on four caster wheels that allow the cracked nuts to be transported to the next stage.

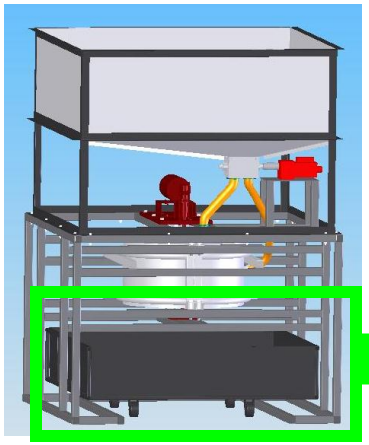

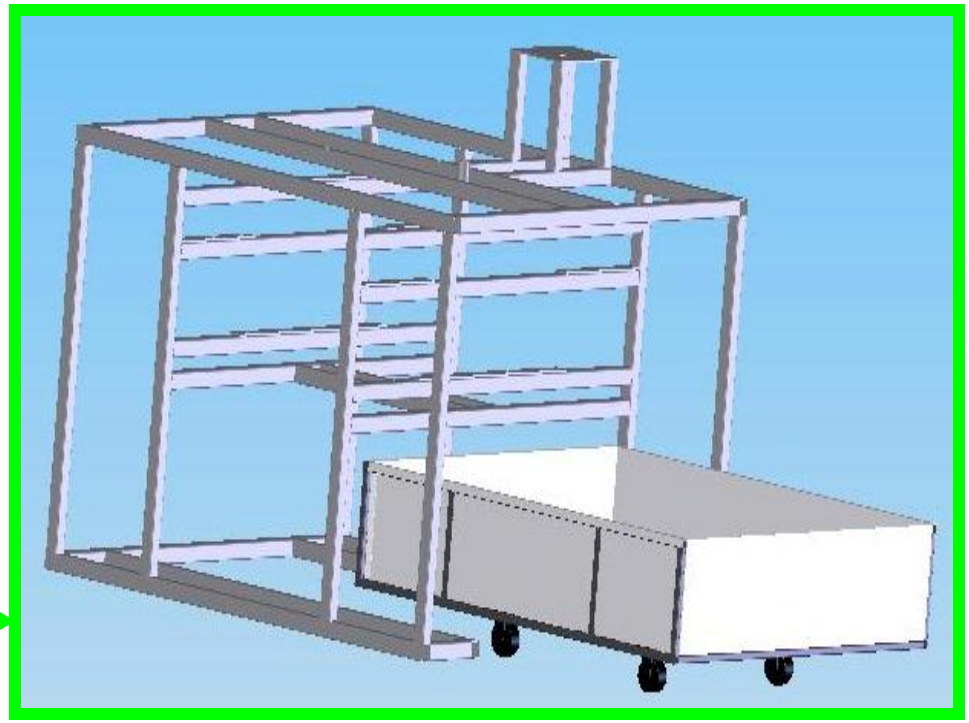

Cleaning Consideration

The two shroud halves are supported by ¼" plastic strips. This allows easy separation for cleaning purposes.

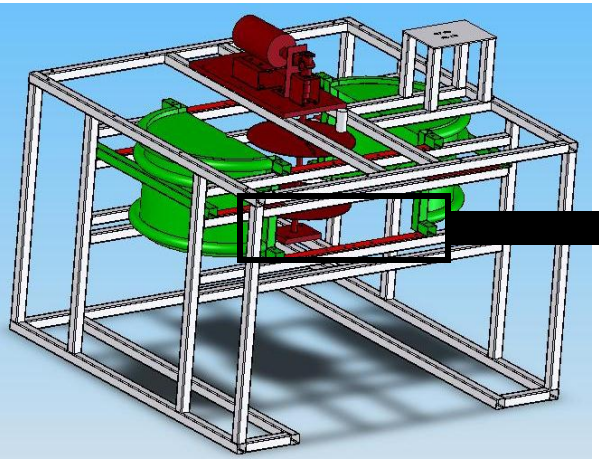

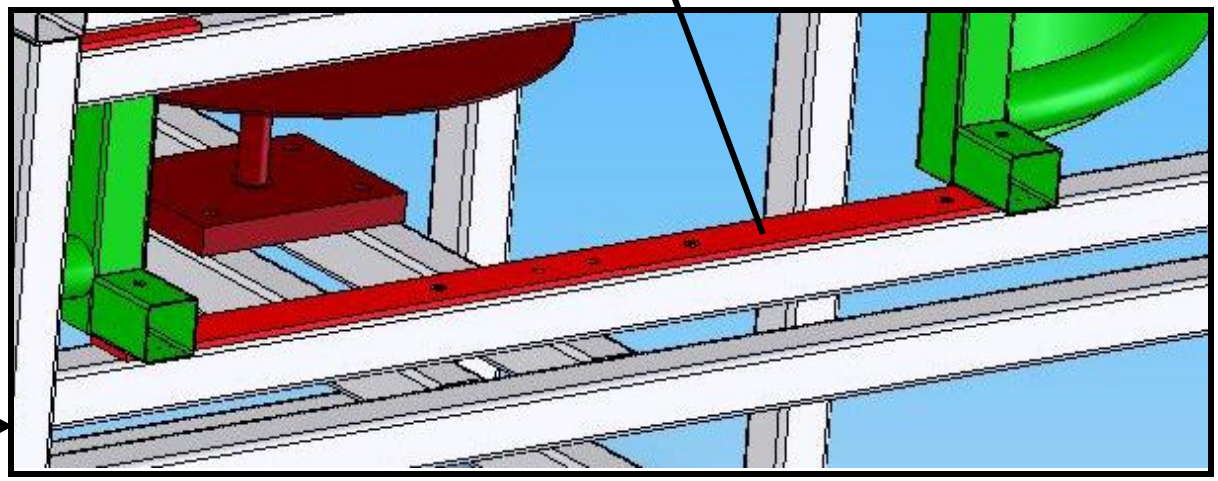

Safety Considerations

Shroud Kill Switch

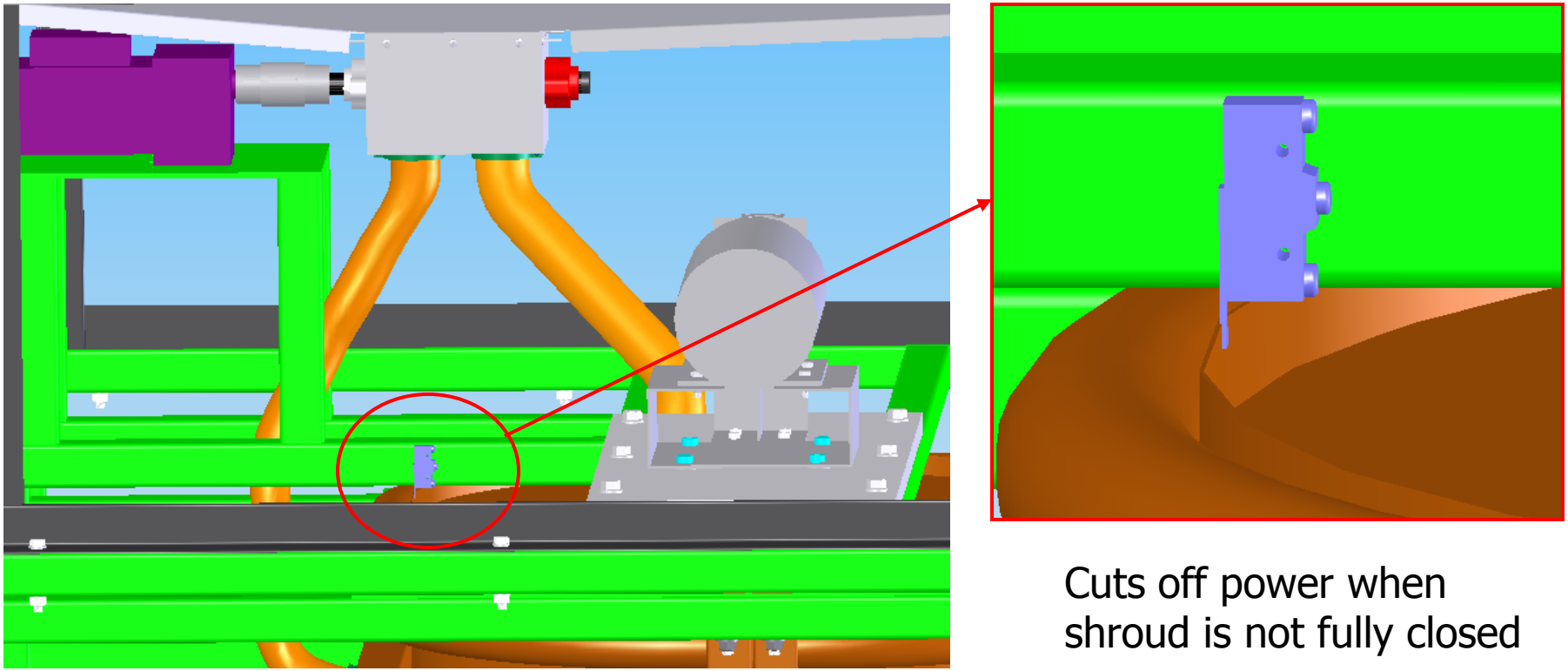

Cuts off power when shroud is not fully closed

Safety Considerations

Fully Enclosed 90° Gearbox

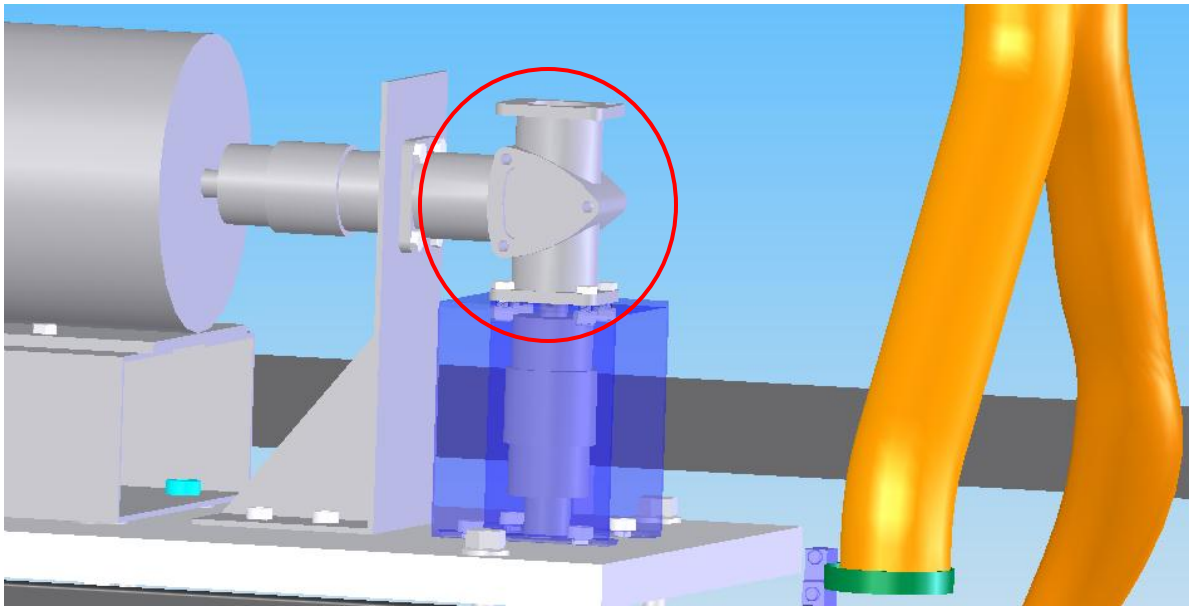

- Provides safe power transfer from motor to rotor shaft
- Permanently lubricated

Safety Considerations

Shroud Cover Plate

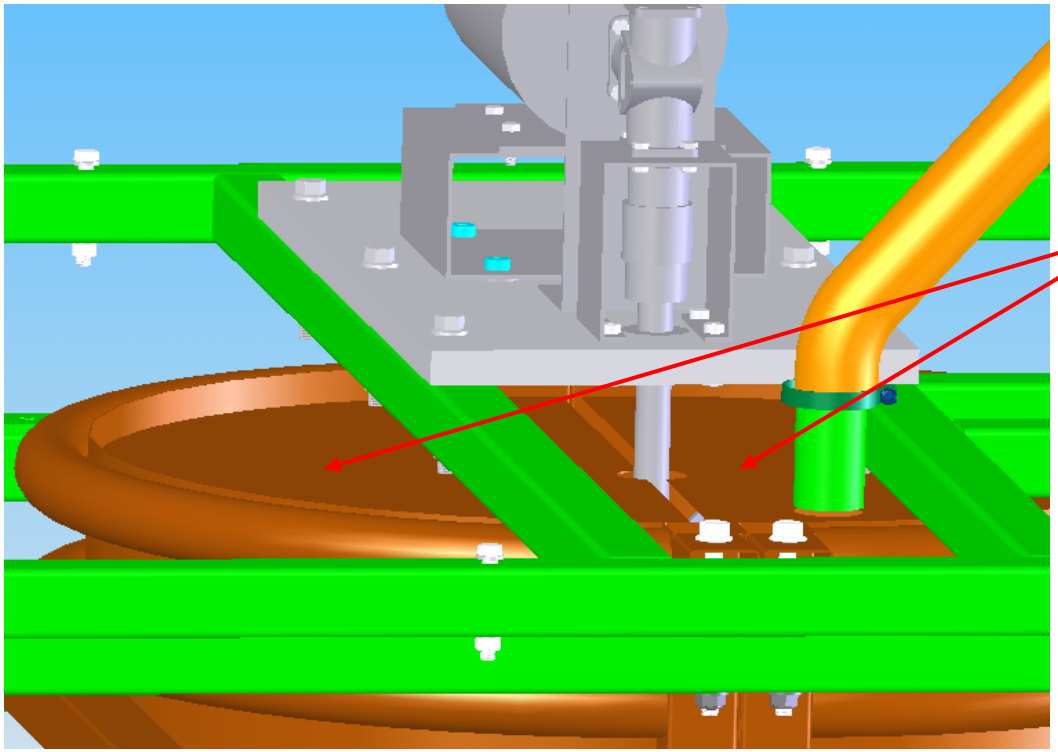

Prevents any objects from entering rotor area

Codes and Standards

- OSHA 1910.219 & 1910.212
  - Safe designing techniques for machines with rotating shafts

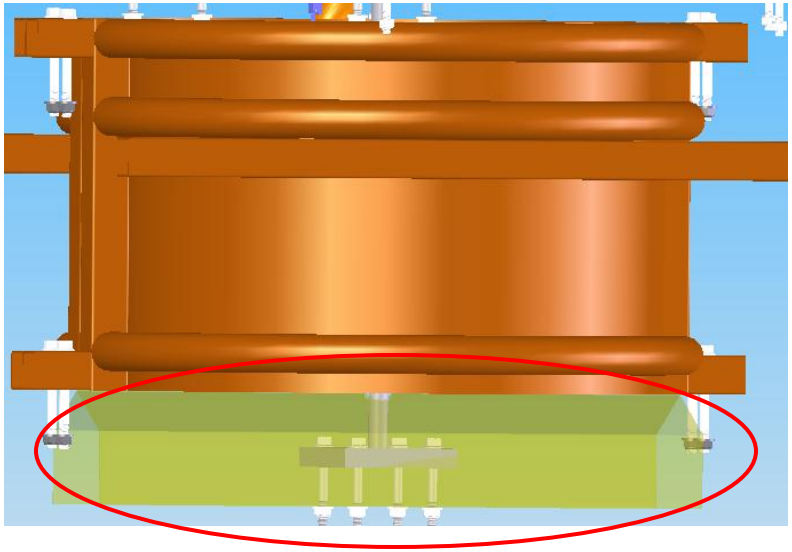

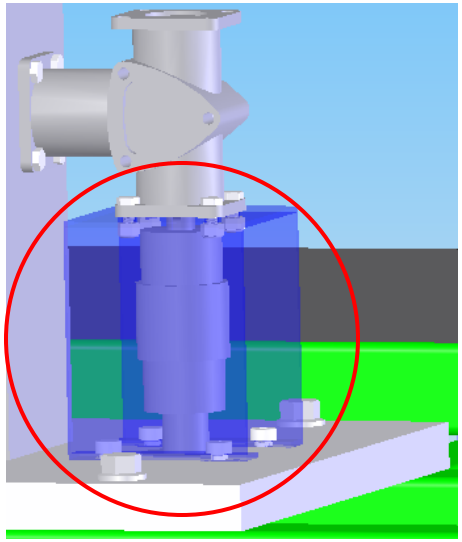

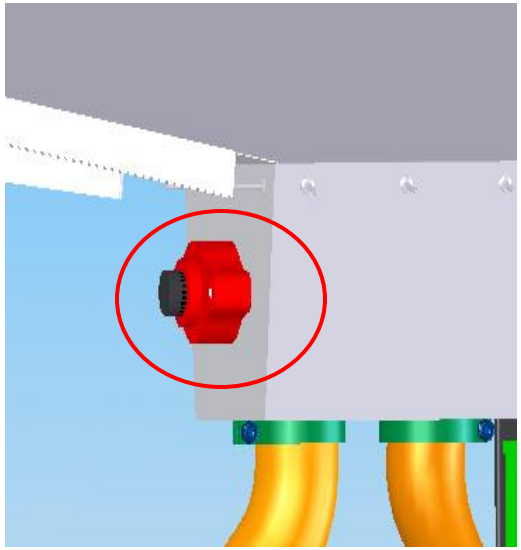

Codes and Standards

- FDA Title 21-110.40
  - Good manufacturing practice in processing human food
- FDA Title 21-177.1580
  - Use of polymers in food processing machinery

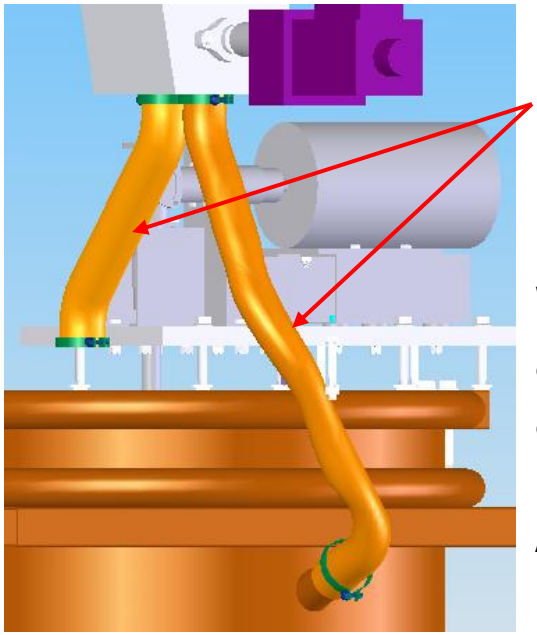

FDA approved polymer tubes

Welds on shroud are ground and assembly washed in acid solution per ASTM A380-99

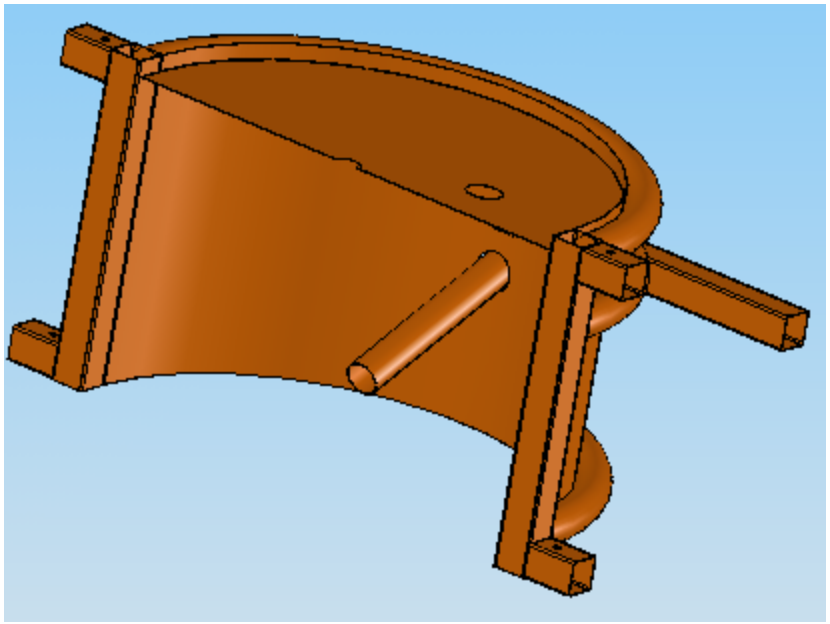

PDS – Calculations and Flow Rates

- PDS targets 200 lb/hr flow of nuts in order to process entire crop over the winter
  - Average Nut Mass = 3 grams

$$\dot{nut} = 200\frac{lb}{hr}\,x\,\frac{1}{.0066}\frac{nut}{lb}\,x\,\frac{1}{3600}\frac{hr}{\sec} = 8.4\frac{nuts}{\sec}$$

- PDS also targets 85% success rate
  - Success defined as complete separation of nut meat and shell

PDS – Calculations and Flow Rates

- Using our test prototype 89% success rate was achieved at the specified feed-rate

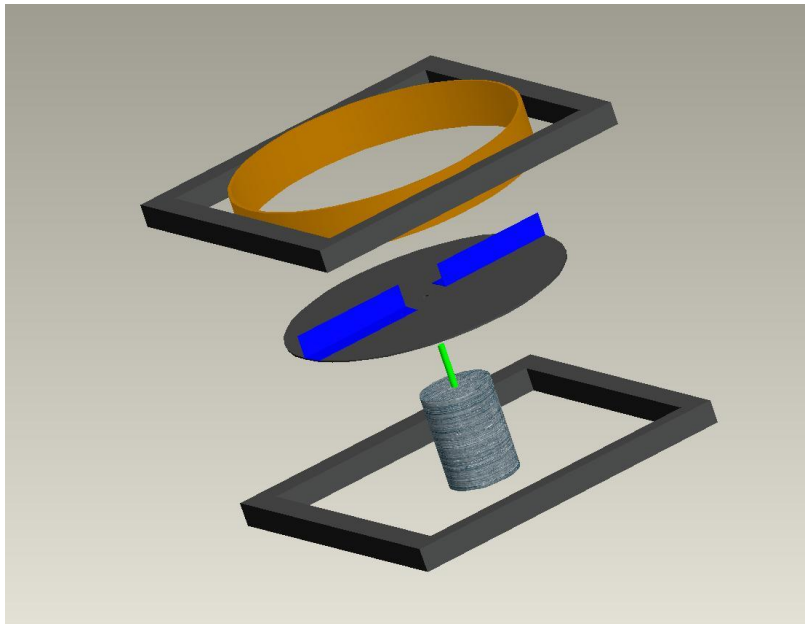

PDS – Calculations and Flow Rates

- The PDS specifies that the hopper should hold enough nuts for 2 hours of operation between refilling
  - Hopper volume exceeds this so the user can decide how long to operate up to 6 hours
  - Actual hopper volume ~60 ft^3

$$V_{2_hours} = \frac{200\frac{lb}{hr}}{30\frac{lb}{ft^3}} * 2hrs = 13.3\,ft^3$$

PDS – Dimensions and Specs

- PDS originally called for a 6 foot height constraint
  - This was changed to 8’ 3” to allow for a larger hopper
  - This still allows for filling with a standard skid loader

PDS – Cost of Sheller

- Target Production Cost:
  - $5,000 - $10,000
- Target Selling Price:
  - $12,000

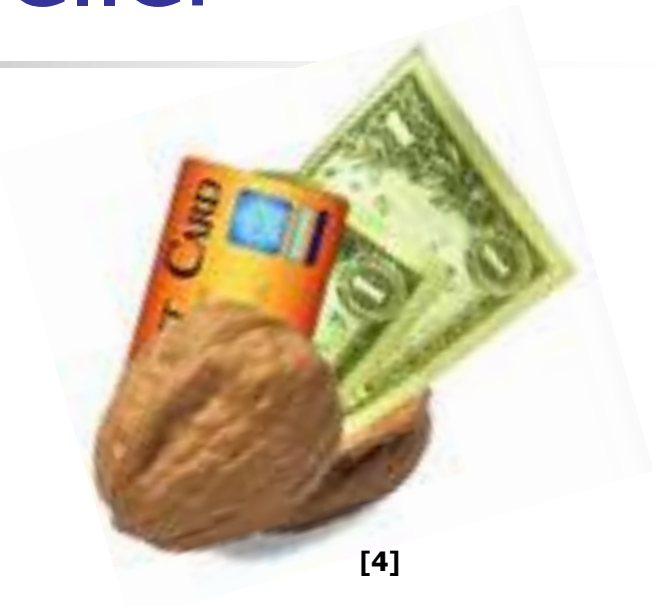

[4]

- Resources we used for costing our Sheller:
  - Society of Automotive Engineering's 2006 Formula Rules for machining, manufacturing and labor (http://www.sae.org/students/fsaerules.pdf)
  - MEPS International for metal prices (http://www.meps.co.uk/)

PDS – Cost of Sheller

- Estimated cost to produce the first sheller, including setup, labor, manufacturing and material:
  - $6,405 (includes a 15% error markup)
  - $9,608 (estimated selling price of first sheller)
- Estimated cost to produce shellers after the first, including labor, manufacturing and material:
  - $4,460 (includes a 15% error markup)
  - $8,000 (estimated selling price for each sheller)
- Estimated selling price is $4,000 less than our PDS specified

PDS – Weight Estimate

- Density of Mild Steel: $0.284 \frac{lb}{in^3}$
- Density of 304 Stainless Steel: $0.289 \frac{lb}{in^3}$
- Calculated material volumes based off of part geometry
- Purchased parts' (motors, bearings, fasteners, etc.) weights were either obtained from the supplier or estimated compared to similar products

PDS – Weight Estimate

- Target Weight per PDS
  - Under 2,000 pounds
- Weight of Metal by Geometry
  - ~100 pounds of 304 Stainless Steel
  - ~600 pounds of Carbon Steel
- Weight Estimate
  - ~1,100 pounds per Sheller

Should the Cracker be put in Production?

Two key areas of concern:

Mechanical: Weld Failure on Rotor, and Balancing issues.

Further testing: Our prototype design was not the same as our actual design. We need to research critical variables such as shroud stiffness, coefficient of friction, and impact angle more thoroughly.

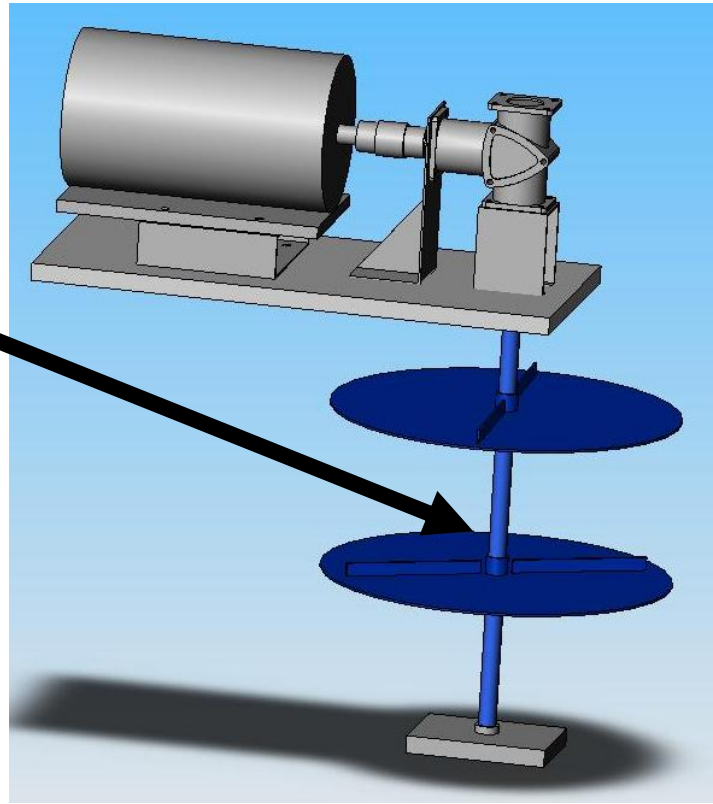

Design has potential but further research and capital are needed to take to market.

Questions?

References

- [1],[2] http://www.badgersett.com/HazHandbook1.html
- [3] Josiah, Scott. *Commercial Hazelnuts in Minnesota.* UM-Extension Service *2000.* http://www.extension.umn.edu/distribution/naturalresources/DD7280.html
- [4] http://www.laspd.com/images/logoNutDollar.jpg

Appendix 4

Appendix 5