Department of Agriculture, Trade and Consumer Protection

Division of Agricultural Development

Agricultural Development & Diversification Program (ADD)

Grant Project Final Report

Contract Number: **24002**

Grant Project Title: **Revitalization of Wisconsin Hops Production**

Amount of Funding Awarded: **$25,000**

Name of Principal Contact Person: **James Altwies**

Organization: **Gorst Valley Hops**

Email Address: **james@gorstvalleyhops.com**

WEB Address: **www.gorstvalleyhops.com**

Report Submitted on: **October 31, 2010**

Original Proposal Concept and Benefits

This project sought to demonstrate the viability of re-establishing a hops production industry in the state of Wisconsin. Growing hops in Wisconsin is not a new idea. Between the years of 1864 and 1880, hops were a major cash crop in the state. Hop fields were planted all across southern Wisconsin with harvests topping 11,000,000 pounds. Sauk County alone accounted for 1/5th of the nation's harvest. Crop mismanagement and disease eventually decimated the industry and it moved to the Pacific Northwest where it remains today.

Gorst Valley Hops (GVH) realized early on that just growing hops and trying to sell them as an unprocessed product was not going to be successful. Therefore, GVH set out to define and implement the requirements that must be met in order to create a viable agricultural crop in the Midwest. These requirements include crop management, nutrient analysis, harvesting, drying, physical and chemical analyses, pelletizing, storing and distribution. Each phase of hop growing must be executed successfully in order to demonstrate that hops can again be a viable high value agricultural crop in Wisconsin which

is appealing to craft brewers. By implementing processes that focus on quality, locally produced hops can be a superior product to the hops produced on a large scale.

Local hops provide a marketing advantage to brewers serving a customer base that typically has a very strong state identity. Market trends are increasing for new craft brewers and the demand for hops is climbing. Local craft brewers in Dane county have also expressed a strong interest in purchasing a locally grown product. Year 2008 estimates revealed that the approximately 380 craft brewers existed in the Upper Midwest requiring up to 4 million pound of hops annually, creating a large potential market value to future Wisconsin hops producers. Capturing only 5% of this market could have potential economic impacts of $3 million annually and require approximately 150 acres of hops. This income potential may be a catalyst for increased economic activity in the state.

Currently, the demand for hops is being met by large commercial growers in the Pacific Northwest, Germany, Czechoslovakia and New Zealand who employ technologies and methods that are suitable for large scale but not economically feasible to the small scale growers currently emerging in Wisconsin. This project addressed this technology gap by researching, designing and constructing appropriately scaled equipment for Wisconsin's fledgling hops industry as well as implementing a scientific approach to each phase of a typical hop growing season. This project also developed a distribution network and a system to offer processing services, consulting, workshops and knowledge forums all of which provided the framework for establishing a locally viable agricultural industry.

Achieving Our Goal

Creating a demand for locally grown hops is the ultimate goal. Without demand there isn't a market. GVH initiated discussions with many local craft brewers in order to determine what type of market would be possible. Those discussions resulted in conversations focusing on what craft brewers wanted from a product and what they either were or were not getting. Based on the needs of the brewers, GVH built a framework for growing and distribution that could fulfill the requirements of the craft brewers in the Midwest. That framework would require an adequate number of growers, education for both the growers and the brewers, and processing services. If potential growers could be educated and equipped with the essential requirements for producing and GVH could successfully process the harvested product into a usable form the supply challenges could be met.

Challenges

Hops face the same challenges as any other agricultural crop; however, hops are not as tolerant to unpredictable elements as would be a row crop such as corn or soybean. Hops require significant amounts of water and nutrients that are not achievable through nature alone. Hops are also a labor intensive crop, with a high start up cost. Hops are not a typical crop and therefore there is little off the shelf equipment or previous knowledge that can be used. The main challenges facing growers include establishment costs, harvesting capabilities and processing. A typical one acre plot can cost in the range of $10,000 - $15,000 with a ROI of up to four years. Harvesting is time consuming as most harvesting on a small scale is done by hand. GVH set out to develop small scale harvesting equipment to

aid in this area. Processing requires very specialized and expensive equipment. Again GVH invested in this equipment and is now able to provide processing services to Midwest growers.

Procurement of a sufficient supply of rhizomes for new plantations is becoming increasingly difficult as the supply has dwindled due to the sudden surge of interest. A Price increase in rhizomes also adds to the cost of a one acre start up.

Accomplishments

The overwhelmingly prominent accomplishment in 2010 was the release of "Hopperbolic" by Furthermore brewery. Hopperbolic features Gorst Valley Hops and was released on October 23rd, 2010. This marks the second consecutive year that a Wisconsin craft brewer used Gorst Valley hops in a beer. Two additional breweries, Bull Falls Brewing Company in Wausau, WI and O'so Brewing of Plover, WI used Gorst Valley hops in 2010. The 2011 harvest is anticipated to be able to supply a much larger volume of hops to local breweries including those that wanted hops in 2010 but were unable to get them due to the limited supply.

Brew Masters from Furthermore visited the GVH farms and discussed varieties and styles of beers. During the visit, the Furthermore brewers were able to walk in the hop yard and get a first hand look at the operation and see the quality of product they would be using. This type of interaction between the growers and the brewers is exactly what GVH is striving for.

GVH started writing a hop manual which is intended to provide detailed information about hops and how that translates to a Midwest market. The Index for the manual is included in Appendix A. Chapters 1 – 3 plus the Introduction are included as attachments to this report.

There are many phases to hop production which need to be met. Each phase must be managed independently and must be completed before later phases can be started. GVH developed methodology for each phase of a typical hop growing season.

Finding Growers

A network of many dispersed growers is required to produce product. Between March 2009 and October 2010, GVH lead seven workshops which provided a comprehensive overview of hops production on a small scale. These seven workshops were attended by over 600 people. The purpose of the workshops is to educate and recruit potential growers. The workshops were held primarily at Monona Terrace in Madison, WI. In the 2010 growing season GVH had nine charter growers representing 16 planted acres. In 2011, 10 to 15 additional new growers will be added increasing the total production to upwards of 35 acres. GVH's Charter Grower program now includes plantations in WI, MI, MN, IL and IN.

Harvesting

A hop yard requires three to four years to mature to full production. In the first two years hand harvesting is feasible. By year three a mechanical harvester is desirable. GVH worked to develop a small scale harvester. Three designs were built and are described below.

Design Type	Relative Complexity	Results
Horizontal feed with two layers of drums which rotate. Each drum contains picking fingers. Bines are fed through the picker on a chain. The drums rotate and pick the bine clean of both cones and leaves. The plant material falls to the bottom where a conveyor evacuates the material to a sorting device.	Complex	Bines would get picked clean but the end of the bine would become wrapped around the first drum pulling the picking fingers off the drum. Despite many hours of tweaking we were not able to overcome this problem. A continuous bine would need to be fed through the rollers.
Vertical feed with two rows of picking fingers on chains. Bines are hung vertically and fed through the picker between the fingers. The fingers move vertically from top to bottom and "scrape" the cones and leaves from the bines. The plant material falls to the bottom where a conveyor evacuates the material to a sorting device.	Less Complex	This is the design that is used in the PNW only on a large scale. The bines were picked clean however the design is more complex than desired and consisted of many moving parts. Ultimately this design could be successful.
A single rotating drum on a stationary platform. Bines are hand fed into the drum with the top of the bine entering the pickers first. The drum rotates and picks the bine clean of both cones and leaves. The plant material falls to the bottom where a conveyor evacuates the material to a sorting device.	Least complex	This design had the fewest number of moving parts and was the most successful and potentially the least expensive. This design proved very effective and holds the most promise for a small scale grower. The drum could be mounted on a variety of equipment or be put on a platform. (see appendix B)

Drying

Growers are responsible for drying their harvested product prior to delivering to the GVH processing facility. Drying is done in a device called an oast. GVH designed several oasts with a horizontal design being the most successful. Growers in the GVH charter grower program use this design per the

specifications provided by GVH. The design consists of layers of trays with a mesh bottom. Hops are loaded into the trays to a depth of approximately 6". The trays are stacked to a height that can accommodate 1/6 of an acres worth of hops and are then sandwiched between a plenum. An industrial fan pulls air through the plenum. After the initial drying to 20% heat is introduced to the ambient air which lowers the relative humidity and aids in the last 10% of drying (See appendix C)

Delivery to Processor (GVH)

After the product is dried the grower is responsible for delivering the product to GVH. This is done using common freight carriers. Hops are packaged in a breathable material such as a grain bag or burlap.

Physical and Chemical Analysis

GVH performs an analysis of each shipment to verify that the product has been harvested and dried correctly. The physical analysis focuses on the quality aspect of the hops such as moisture content. Hops that do not meet the physical requirements may be rejected if the physical properties cannot be rectified. Each shipment is chemically profiled in the laboratory at the GVH processing. Hops with chemical profiles that are out of range are rejected. GVH constructed a full service laboratory which is capable of providing chemical analyses consistent with the ASBC (American Society of Brewing Chemists) methods.

Hammering

After all of the product has been sent to GVH it is batch processed by variety starting with the hammer mill. GVH purchased a hammer mill capable of hammering hops to ¼" minus mill power in preparation for pelletizing.

Pelletizing

Pelletizing hops requires specialized equipment. The mill powder from the hammer mill is fed into the pelletizer where it is compressed into a die which forms a pellet. The high pressure in the die creates excessive heat which must be removed or the pellet will lose the alpha acids and essential oils rendering them unusable for brewing. Pellets are kept under 100 degrees Fahrenheit using a gaseous form of liquid nitrogen which is injected into the die. The liquid nitrogen is transformed to a gas using a phase separator. The temperature of the die and the hops is monitored throughout the process and must constantly be adjusted.

Blending and Chemical Profile

Pelletized product is blended to ensure a uniform characteristic for each variety. Then a sample of the blend is analyzed for the alpha and beta acids as well as the oil content. These results are printed on each package. Gorst Valley hops are exhibiting oil content 25% higher than the industry average which is attributed to the low temperature drying techniques used. This higher oil content will result in more flavor for the craft brews.

Packaging and Distribution

The pelletized product is packaged in oxygen barrier bags using an industrial sealer with a nitrogen gas flush system. The bags are labeled with variety, alpha acid and oil content and placed in a freezer until sold.

The entire available product was sold to three different breweries in 2010. Demand for the product far exceeded supplies.

Media Attention

GVH has been in many various publications including The Wisconsin State Journal (lead story plus follow ups), Agri-view and many others. Brewing magazine has contacted GVH In addition to a number of articles printed and aired across the Midwest. Wisconsin Public Television's show *In Wisconsin* will air on November 4th at 7:30pm with a documentary on GVH's efforts to restore hops to Wisconsin and the rest of the Upper Midwest.

Data Collection

Harvest

Harvest is the pinnacle of the season for a grower. Hand harvesting is very labor intensive and extremely time consuming. Bines can take up to 45 minutes each to hand harvest. With over 1000 bines in a typical acre this is a daunting figure. GVH performed scientific studies on various harvesting techniques. Data was collected for both hand harvesting and mechanical harvesting. An interesting discovery was that over 90% of the hop cones were located in the top 1/3 of the bine. When harvesting only the top 1/3 of the bine the harvest rates were nearly double those where the entire bine was harvested. The data is presented in the following table.

Day	People	Sample	bines	Pounds (wet)	Minutes/ bine/ person	lb/min (wet)	lb/hr/ person (wet)	lb/hr (wet)	% of yield
1	7	Entire bine	136	155	27	0.29	2.5	17	100
2	7.5	Entire bine	119	135	31	0.25	2.14	15	100
2	7.5	Top 5 feet	17	16	16	0.4	3.43	24	91
2	7.5	Bottom 11 feet	17	1.5	4	0.15	1.28	9	9

At 30 minutes per bine the harvest time for a one acre plot would be approximately 600 hours. Since the hops do not all mature at the same time a crop of say four different varieties can be harvested over four events, each about 150 hours. A crew of five can accomplish each event in about 4 long days which is economically feasible.

The mechanical harvester proved to be significantly faster in removing the cones then did hand harvesting. However, mechanical harvesting introduced another challenge. All parts of the bine excluding the main stem are stripped away with a mechanical harvester. Therefore, a method for separating cones with leaf material is required. Large scale growers in the PNW use vast arrays of dribble belts to accomplish this. Small scale growers will not have access to the scale of belts required. GVH experimented with several methods for sorting. Using a 1" mesh as a primary separator followed up with forced air under a ½" mesh screen did an adequate job. GVH estimates that using the mechanical harvester along with the crude sorter reduces the amount of time required per bine by 75%. Additional work needs to be performed in this area.

Drying

The prevailing notion in hop production is that air heated to a temperature of 140F must be used to properly dry hops. For large scale commercial farms that must dry the cones in 8 hours or less, this is true. For small scale growers, we were looking for a way to preserve more of the oils and aromas in the cone, many of which have a boiling point of 100F or less, even though this may extend the drying time to several days.

According to drying isotherms developed in the 70's, the hop cone should be able to go from a starting moisture content of 80% down to approximately 14% in air at a relative humidity in excess of 80%. This was observed to be correct. Additionally, the isotherm showed that air below 55% relative humidity was necessary to dry the cone down to the final desired condition of 8%. This was also observed to be approximately correct. Therefore GVH is promoting the use of ambient air in an open system to dry the cones down to 20% moisture content or less and then either applying sufficient heat to that air to lower the relative humidity or close the system and use dehumidification to finish the drying process. This technique has proven itself through final oil contents that are 20% to 70% higher than the industry standard, which will be noticeable to the brewing community.

Conclusions

Based on the successful crops from the 2009 and 2010 growing seasons and the strong demand for the product, several conclusions can be drawn.

1. There is a demand for locally grown hops in the Midwest
2. Hops do indeed grow in the Midwest
3. There is an increasing network of growers eager to enter the marketplace
4. Hops can be processed in the form that brewers require and done so on a small scale

The short term challenges will continue to be in the harvesting area where mechanical pickers and sorters will need to be refined.

Future Plans

GVH started with an aggressive goal and will continue to work towards that goal. Additional growers will be recruited, harvesting and sorting equipment will be refined and the market for locally grown hops will be expanded.

Infrastructure expansion will occur during the offseason and include additional space for cold storage in order to meet the harvest volume for 2011. A part time employee will also be considered to aid in the laboratory and processing facility oversight.

Relevance to Future Agriculture in Wisconsin

This project serves as an example of how small scale farming can succeed inside a larger industrialized system. Bringing together a distributed network of farmers all working towards a common end product destined for a local market can be successful if there is adequate education, technical and business direction, and a demand for the local product. This system can increase profits for both the farmer and the business using the product by obtaining a higher price for the product while at the same time reducing the costs of distribution and creating a smaller carbon footprint. This success will only be realized if the quality of the products can be shown to be superior as the cost will almost certainly be higher for consumers. However it has been shown that consumers are willing to pay for quality when it comes to supporting local initiatives.

Appendix A – Hops Manual Index

Table of Contents

Introduction

- Intro with some hops history
- Purpose
- Philosophy
- How to Use This Manual
- Acknowledgements

Part 1

Chapter 1. Hop Botany

- Origins
- Plant Classification
- Habit
- Chemistry
- Varieties (mention dwarf varieties)
- Disease Resistance and Vigor
- Cautions

Chapter 2. Location, Location, Location

- Day Length and Growing Season
- Lie of the Land
- Soil
- Sunlight
- Moisture and Drainage
- Access

Chapter 3. Establishing a New Field

- Field Layout
- Soil Preparation
- Trellis types
- Trellis Installation
- Irrigation systems and setup

- Selecting Varieties
- Ordering Rhizomes
- Assessing Rhizome Quality
- Storing rhizomes

Chapter 4. Fertility (after establishment section)

- Hops requirements
- Soil Testing
- How to read a soil test
- Correcting pH
- Fertilizer Application
- Deficiency and toxicity symptoms
-

Chapter 5. First Year Culture

- Preparation
- Planting
- Mulching and covercropping (weed management)
- Training
- Irrigation
- Fertilization
- Harvest
- After Harvest

Chapter 6. Second Year Culture

- Training
- Irrigation
- Fertilization
- Harvest
- After Harvest

Chapter 7. Mature Plant Culture

- Training (Rhizome cutting is in Part 2)
- Pruning
- Irrigation
- Harvest
- After Harvest

Chapter 8. Pests and Their Control (just the biggies)

- Pest Outbreak Prevention
- Scouting
- Pest Identification
- Natural Controls
- Application Methods
- Organic Controls

- Non-organic Controls

Chapter 9. Diseases and Their Control (just the biggies)

- Disease Outbreak Prevention
- Scouting
- Disease Identification
- Natural Controls
- Application Methods
- Organic Controls
- Non-Organic Controls

Chapter 10. Harvesting

- Estimating Yield
- Judging Ripeness
- Preparation
- First and Second Year
- Third and Following Years
- Hand Harvesting
- Mechanical Harvesting
- Estimating Quality

Chapter 11. Drying (Dan will do)

- Preparation
- Moisture content determination
- Small-scale Oasting
- Medium-scale Oasting
- Larger-scale Oasting
- Packaging for Transport
- Packaging for Storage
- Storing
- Estimating Quality

Chapter 12. Processing (not too in depth)

- Whole-leaf Processing and Storage
- Milling and Mill Powder Storage
- Pelletizing and Pellet Storage
- Chemical Property Testing
- Long-term Storage
- Estimating Quality
- Transport

Chapter 13. Costs of Production including time(Gregg will do worksheet)

- Layout
- Trellising
- Planting

- Culture
- Pest and Disease Treatment
- Hand Harvesting
- Mechanical Harvesting
- Oasting
- Packaging
- Storing
- Processing
- Marketing
- Shipping

Part 2

Chapter 14. Hops History in the US

- Europe
- Eastern US
- Wisconsin
- The Pacific Northwest
- Today

Chapter 15. Sustainable versus Organic Production

- Definition of Sustainable
- Definition of Organic
- Benefits of Organic
- Weaknesses of Organic

Chapter 16. Rhizome Cutting

- Judging Plant Maturity
- Estimating Rhizome Yield
- Rhizome Cutting
- Assessing Rhizome Quality
- Packaging for Storage
- Storage
- Transport

Chapter 17. Using Hops in Beer (Joe can do much of it)

- Bittering
- Aroma
- Preservative Qualities
- Hops Varieties and Beer Styles

Chapter 18. Other Uses of Hops

- Edibles: Tea, Shoots – sauté, bread, soup

- Soap
- Medicine and Biochemistry
- Bine Recycling

Chapter 19. Building a Hops Industry

- Assessing the Market
- Processing Capacity
- Finding Other Growers
- Building a Community
- Contributing to the Knowledge Base
- Maintaining Quality
- Sustainable Growth
- Long Term Outlook

Part 3

Suggested Reading

References

Index

Appendix B – Oast Designs and Prints

Appendix C – Gorst Valley Hops Mechanical Hop Picker Design Narrative and Prints

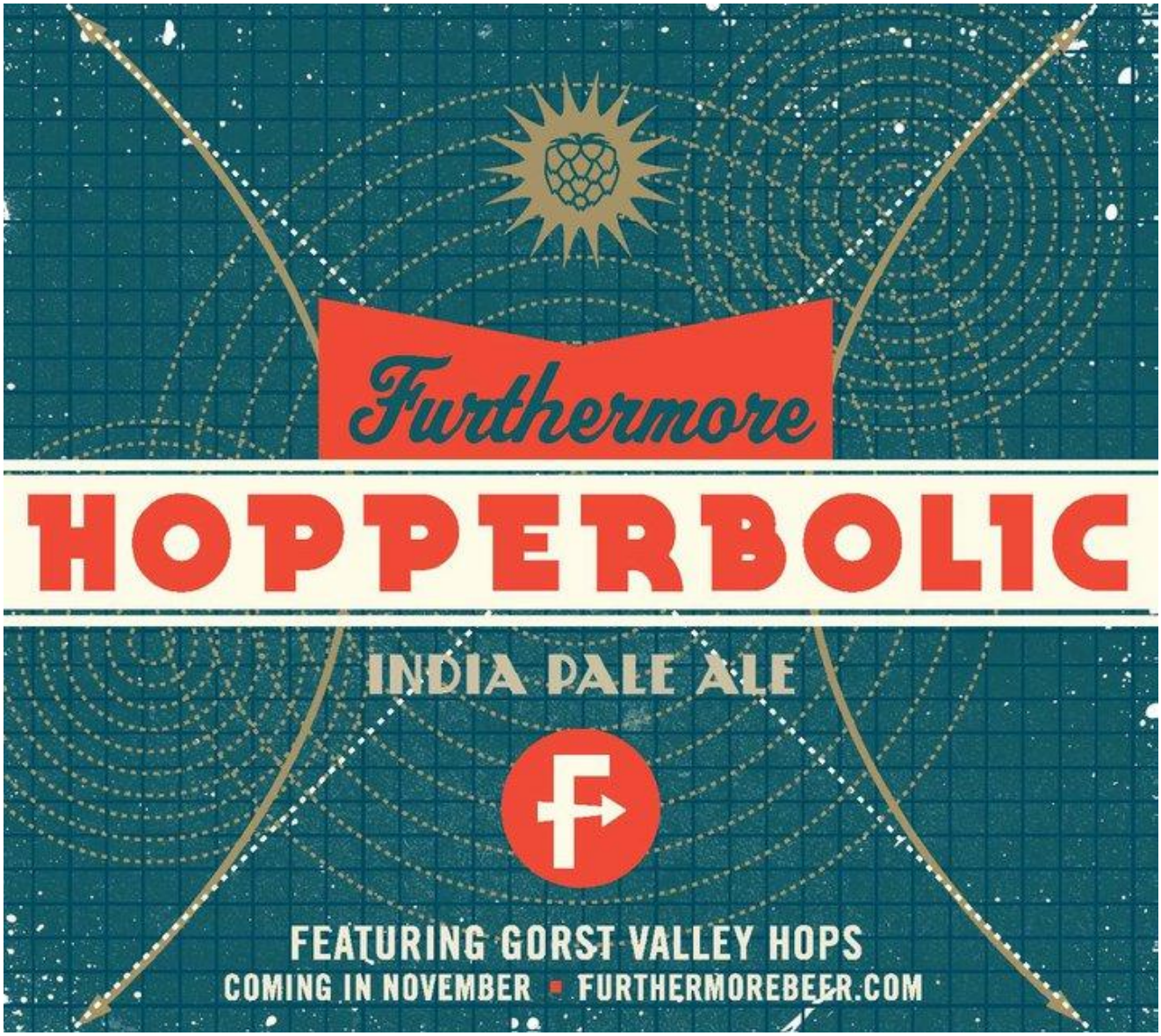
Furthermore
HOPPERBOLIC
INDIA PALE ALE
FEATURING GORST VALLEY HOPS
COMING IN NOVEMBER ▪ FURTHERMOREBEER.COM

Growing Hops Commercially in the Upper Midwest

By

James Altwies

Christine C. Molling

Daniel Dettmers

Joseph Wegner

Copyright 2010

Introduction

Beer! For most of us, the word brings to mind good friends, good times, and great flavors. We have found that true beer enthusiasts are the happiest group of people we've ever had the pleasure to encounter. Our love of beer has led us down the path of wanting to be involved in the creation of beer in some essential way. And that "way" has turned out to be hops!

Hops were once a huge contributor to the economy in the Upper Midwest region of the United States, particularly in Wisconsin. Legions of thirsty beer drinkers worldwide caused a bigger demand for hops than could be grown in Europe and New England, due to unsolved fertility and pest problems. Unfortunately, the hops economy in Wisconsin eventually suffered from those same problems, so it was a boom and bust situation. Since then, the Pacific Northwest has become the main hops production region in the US, due to their lower disease pressure and long growing season.

We, the authors of this manual, are partners in a company called Gorst Valley Hops. We made it our mission to re-establish a vibrant commercial hops industry in the Upper Midwest. And since a regional industry really can't be created by us alone, we've reached out to other beer enthusiasts to help establish this industry. This hops growing manual is for all those beer lovers out there, who want to be not just consumers of beer, but part of beer creation. We want to "tap" the enthusiasm that comes from your desire for tasty craft beer, and turn all that positive energy into fresh, flavorful, high quality hops.

Purpose

Our purpose in writing this manual is to provide a concise source of information that you can use to become a small-acreage commercial hops producer in the Upper Midwest US. Although this manual will provide you with all the basic knowledge required to grow, process, and sell high quality hops, you will find that hops production is a continuous learning process. Each hop grower's location and conditions will be a little different from that of others, and so the basic knowledge provided here will be refined continuously through your experiences. Yet, throughout this manual, we will realistically portray all the hard work and attention to detail that's required to produce truly high quality hops. Although it may seem daunting, don't let this discourage you. Both the devil and God are in the details, as they say. Pay proper attention to the details as we advise, and your hops will be heavenly. Ignore the details and they'll taste like hell.

Philosophy

Our philosophy at Gorst Valley Hops is difficult to summarize in a single phrase, but much of it is tied to the concept of "love your neighbor." We very much enjoy living where we do, and we want to do everything we can in order for us and our neighbors to live an enjoyable and sustainable life. That means preserving agricultural lands, sustaining local jobs, and conducting business in an environmentally friendly manner. By acting in a way that is "loving", or beneficial to our neighbors, we create a robust and resilient local economy, which helps support our lives as well. One aspect of the sustainability is to have a number of small acreage hop growers spread across the region. While hops are grown in the Pacific Northwest region on large acreages, we advocate acreages on the order of 1 to 10 ac for the Upper Midwest, which will allow smaller growers to earn a decent living off small parcels of land. Small acreages also encourage high quality, as more attention can be paid to the health of a few acres of crop. We advocate using sustainable agricultural methods, in order to preserve the environment and leave a healthy ecosystem for our descendents. We also advocate local sources and markets for several reasons. It makes economic sense to ship goods the shortest possible distance – helps your carbon footprint – and supports your local economy. Knowing that your hops are being used to brew beer within 20 miles of your house is a special bonus. Imagine pouring your guest a frosty mug full and saying "my hops are in this beer!" If you are a brewer, being able to travel over to the next town and see the year's hop crop growing and talk to the farmer about variety and quality issues lends a greater sense of craft to your craft beer. And buying and selling local products grows the local economy. Why subsidize the tax payers in a state on the other side of the country when your dollars can support your neighbors and the local infrastructure from which you will benefit directly? Throughout this manual we will emphasize ideas that reinforce the concept of "loving" your neighbor by acting locally: providing quality over generic quantity, attention to detail over mindless efficiency, and small is beautiful. We hope you will agree with this philosophy.

How to use this manual

This manual is organized into three main parts. Part 1 is something of an A to Z collection of everything you need to know and do in the first few years of hops production. Part 2 provides more background information on hops and discusses long term aspects of your hops business. Part 3 contains reference material.

If you are unfamiliar with hops, you may wish to read chapters 14, 17, and 18 in Part 2 first in order to give yourself a broad view of the history and uses of hops. Then you can jump back to Chapter 1. If you already are familiar with hops and want to dive into hop growing, we suggest you read Part 1 (Chapters 1 through 13) thoroughly. You may skip Chapters 6 and 7 the first year, but be sure to read the rest of Part 1. If you are foremost concerned with project

financials, we suggest that you start with Chapter 13 using the worksheets to calculate time and financial resources required for high quality production. Then you may continue reading from Chapter 1 on.

You should plan to review Part 1 every spring to refresh your memory of the tasks ahead. Part 2 makes for good fireside reading in the winter and should definitely be read by the time your plants are mature (year 3 or 4). And since each subject we cover in this manual could be a book on its own, we suggest sources in Part 3 to further your education.

Acknowledgements

We wish to first of all, thank our families who have patiently put up with our double careers and use of weekends for more work instead of recreation, housekeeping, and child care. We thank the brewers for beer, encouragement, and willingness to try our product. Those two guys at the UW Herbarium. And blah blah blah.

Table of Contents

Introduction

- Intro with some hops history
- Purpose
- Philosophy
- How to Use This Manual
- Acknowledgements

Part 1

Chapter 1. Hop Botany

- Origins
- Plant Classification
- Habit
- Chemistry
- Varieties (mention dwarf varieties)
- Disease Resistance and Vigor
- Cautions

Chapter 2. Location, Location, Location

- Day Length and Growing Season
- Lie of the Land
- Soil
- Sunlight
- Moisture and Drainage
- Access

Chapter 3. Establishing a New Field

- Field Layout
- Soil Preparation
- Trellis types
- Trellis Installation
- Irrigation systems and setup
- Selecting Varieties
- Ordering Rhizomes
- Assessing Rhizome Quality
- Storing rhizomes

Chapter 4. Fertility (after establishment section)

- Hops requirements
- Soil Testing
- How to read a soil test
- Correcting pH
- Fertilizer Application
- Deficiency and toxicity symptoms
-

Chapter 5. First Year Culture

- Preparation
- Planting
- Mulching and covercropping (weed management)
- Training
- Irrigation
- Fertilization
- Harvest
- After Harvest

Chapter 6. Second Year Culture

- Training
- Irrigation
- Fertilization
- Harvest
- After Harvest

Chapter 7. Mature Plant Culture

- Training (Rhizome cutting is in Part 2)
- Pruning
- Irrigation
- Harvest
- After Harvest

Chapter 8. Pests and Their Control (just the biggies)

- Pest Outbreak Prevention
- Scouting
- Pest Identification
- Natural Controls
- Application Methods
- Organic Controls
- Non-organic Controls

Chapter 9. Diseases and Their Control (just the biggies)

- Disease Outbreak Prevention
- Scouting
- Disease Identification
- Natural Controls
- Application Methods
- Organic Controls
- Non-Organic Controls

Chapter 10. Harvesting

- Estimating Yield
- Judging Ripeness
- Preparation
- First and Second Year
- Third and Following Years
- Hand Harvesting
- Mechanical Harvesting
- Estimating Quality

Chapter 11. Drying (Dan will do)

- Preparation
- Moisture content determination
- Small-scale Oasting
- Medium-scale Oasting
- Larger-scale Oasting
- Packaging for Transport
- Packaging for Storage
- Storing
- Estimating Quality

Chapter 12. Processing (not too in depth)

- Whole-leaf Processing and Storage
- Milling and Mill Powder Storage
- Pelletizing and Pellet Storage
- Chemical Property Testing
- Long-term Storage
- Estimating Quality
- Transport

Chapter 13. Costs of Production including time(Gregg will do worksheet)

- Layout
- Trellising
- Planting
- Culture
- Pest and Disease Treatment
- Hand Harvesting
- Mechanical Harvesting
- Oasting
- Packaging
- Storing
- Processing
- Marketing
- Shipping

Part 2

Chapter 14. Hops History in the US

- Europe
- Eastern US
- Wisconsin
- The Pacific Northwest
- Today

Chapter 15. Sustainable versus Organic Production

- Definition of Sustainable
- Definition of Organic
- Benefits of Organic
- Weaknesses of Organic

Chapter 16. Rhizome Cutting

- Judging Plant Maturity
- Estimating Rhizome Yield
- Rhizome Cutting
- Assessing Rhizome Quality
- Packaging for Storage
- Storage
- Transport

Chapter 17. Using Hops in Beer (Joe can do much of it)

- Bittering
- Aroma
- Preservative Qualities
- Hops Varieties and Beer Styles

Chapter 18. Other Uses of Hops

- Edibles: Tea, Shoots – sauté, bread, soup
- Soap
- Medicine and Biochemistry
- Bine Recycling

Chapter 19. Building a Hops Industry

- Assessing the Market
- Processing Capacity
- Finding Other Growers
- Building a Community
- Contributing to the Knowledge Base
- Maintaining Quality
- Sustainable Growth
- Long Term Outlook

Part 3

Suggested Reading

References

Index

Chapter 1 Hop Botany

Origins

The hops we are most familiar with are descendents of the wild hop native to Eurasia. This plant was known as a food plant to the Romans, who used the shoots as a vegetable. After it was discovered in the 11th century that hops are useful to flavor and preserve beer, they were domestically grown. Generations of hops growers selectively bred lines of hops for certain properties: preservative qualities, bittering and aroma. Breeding work continues today.

Plant Classification

The hop plant bears the scientific name *Humulus lupulus*. The genus name, *Humulus*, is derived from the Low German name for the plant, which grew wild on the stream banks and forest edges in Northern Europe and western Asia. The species name, *lupulus*, is Latin for "little wolf." This name refers to the plant's aggressive habit of clambering over shrubs and trees as it reaches for sunlight. Botanically, hops are closely related to *Cannabis sativa* (marijuana or hemp), with which they share the Cannabaceae family. There is another hop in the same family native to eastern Asia: *Humulus japonicus* (Japanese hop). It appears very similar to *H. lupulus*, but is not useful for brewing. Another closely related plant, though in a different family, is *Urtica dioica* (stinging nettles). If you have the opportunity, look at young nettle plants and hop sprouts in spring, and you will see the resemblance. Hops, hemp and nettles share the Urticales order with the elm, mulberry and cecropia families.

The domestic hop grown for beer brewing is a variety of the Eurasian hop, *Humulus lupulus*, and is referred to as *Humulus lupulus* v. *lupulus*. The "v." stands for "variety". There are several other hop varieties that are native to North America: *H.l.* v. *lupuloides*, *H.l.* v. *neomexicanus* and *H.l.* v. *pubescens*. These varieties have been classified as the same species because they can all successfully interbreed with each other. In fact, over the years botanists have reclassified hops samples multiple times in herbaria (scientific collections of plant specimens), as it is sometimes difficult to differentiate between one variety and another. The part of the definition that is used to differentiate between varieties contains wording like "usually more than 15 hairs per 0.1 sq. mm…" A microscope is probably needed in many cases. The fact that the varieties can interbreed means that they tend blur traits where two or more varieties occur. Adding to the confusion is the existence of naturalized domestic Eurasian hops, which can cross breed with the hops native to North America. Any hops you might see growing wild in North America may be a native, a native-domestic cross, or a naturalized domestic. All, some, or none of them may be of any value to brewers and may not take kindly to removal from their current environment. Transplanting "wild" hops is a tricky business.

Habit

The hop is a perennial herbaceous bine, with individual plants capable of living 20 or more years. The portion that survives from one year to the next is the crown, an underground structure consisting of roots, rhizomes, and buds. The above ground portion of the plant consists of multiple "bines", vine-like stalks that climb in a spiral fashion up to 30 feet with the aid of tiny hooked hairs instead of curling tendrils or sucker-like appendages of a true vine. The bines die back to the ground each year, usually due to frost-kill, and new ones sprout up from the crown in early spring.

Leaves of the hop plant emerge from the bines at swollen nodes spaced several inches to about a foot apart. Leaves on petioles (leaf stems) are opposite, approximately heart-shaped, with up to 5 lobes on the leaf. The margins of the leaves are serrated, and the leaf surface is slightly puckered and rough, not smooth. At nodes beginning a few feet off the ground, lateral branches also grow. Flowers form near the end of the lateral branches. Hops are dioecious, which means that plants can bear either male or female flowers, but not both. Male plants produce male flowers bearing pollen, and female plants bear female flowers that form into tightly packed clusters called strobiles. If fertilized with pollen from a male hop, a female strobile will form seeds. Occasionally monoecious (bearing both male and female flowers) hops plants will be found, but the flowers are usually infertile. Female hops plants experiencing environmental stress (usually hight heat or drought) during their growing season will also sometimes grow male flowers. Again, these are usually infertile. Figure 1.1 (left) shows the male inflorescence. Each male flower is 1-2 mm in length, while the whole panicle is 5-10 cm. The female inflorescence is called a strobile. Flowers begin to form in mid-July. The strobile begins as a small "burr" (Fig. 1.1, center) less than 1 cm long, and elongates its center stem and bracts until it looks like the pine cone-like structure you see in Figure 1.1. (right). Strobiles are often referred to as "cones" and are the part of the plant that is harvested for beer brewing and other herbal needs. Strobiles range from 1 to 5 cm long, depending on variety.

Figure 1.1 A panicle of male hop flowers (left). The burr stage of a female hop flower (center). The mature cone stage of a female hop flower (right).

Hop plants can reproduce in two ways. Sexual reproduction, mentioned above, occurs when a female flower is wind pollinated by a male and produces a viable seed. The round seeds are about 1 mm in diameter and are easily thrown some distance from the mother plant, or transported long distances by

birds via their droppings. Hops can also reproduce asexually via their rhizomes. A rhizome is an underground stem that grows horizontally away from the plant at a shallow depth. Rhizomes store carbohydrate for the plant over winter and grow adventitious buds at nodes. These buds can produce either roots, if they are facing downward, or bines if they are facing upward. As the rhizomes grow outward and develop new roots and bines, the plant spreads outward from its original crown. If separated from the parent plant, a rhizome can form its own crown independently. In fact, to propagate hops plants that have desired characteristics, rhizome cutting is used exclusively. Seed production is prevented by barring male hops from the hop yard to guarantee that no new mixed-parentage hops plants grow in the hop yard.

Chemistry

The main purpose of harvesting the hop strobiles is to obtain the chemical compounds found in lupulin. Lupulin is a yellow, sticky substance produced by special glands beneath the bracts of the hop strobile. Figure 1.2 is a cutaway view of a hop cone, showing the yellow lupulin. Domesticated hop cultivars have been bred to produce large amounts of lupulin.

Figure 1.2 A cutaway view of a hop cone showing the yellow lupulin at the base of each bract (left). A close-up view of lupulin grains on the base of the bracts (right).

The main chemical constituents of lupulin are acids, volatile oils, tannins and flavonoids. Different hop cultivars will have a different balance of these chemicals. Alpha acids provide bittering for beer, foam stability and are antimicrobial, which helps to preserve beer by preventing bacteria growth while allowing yeast growth. Beta acids are also antimicrobial, but contribute little flavor to beer. Volatile oils contribute a variety of flavors and aromas to beer: grassy, citrusy, piney, etc. Phenolic acids and tannins also contribute to beer flavor and aroma. In excess, phenolic compounds can smell cheesy, foul, or similar to boiled cabbage. Excess tannins produce a mouth-drying bitterness. Hop flavonoids contain plant estrogens. These estrogens have been scientifically shown to have biological effects on mammal cells. Historical anecdotes also indicate they can produce feminizing characteristics in men and affect women's hormonal cycles. Hops are used medicinally, mainly in the form of tea, to relax and calm.

Cultivars

There are well over one hundred hop cultivars that have been developed in the past several hundred years. Recent breeding efforts have emphasized disease resistance and high alpha acid content for bittering. Dwarf varieties have also recently been developed, although they are not yet widely found in commercial production at this time. Below is a list containing some of the more well-know hop cultivars categorized by purpose.

Table 1.1 Some popular hop cultivars categorized by main purpose. A * symbol indicates dwarf.

Purpose	Cultivar name
Bittering	Galena, Nugget, Summit*, Magnum
Aroma	Amarillo, Cascade, Centennial, Golding, Mt. Hood, Sterling, Willamette, First Gold*, Hallertau Mittelfrüher, Saaz, Liberty, Fuggle, Tettnanger
Multipurpose	Cluster, Glacier, Simcoe, Brewer's Gold, Chinook, Northern Brewer, Bullion
Medicinal	Teamaker

Disease Resistance and Vigor

Not all hops are equal in their vigor or their ability to resist the effects of variable weather, moisture conditions, fungus, and viruses. Breeding efforts in the latter half of the 20th century and today have produced new cultivars that are more productive in stressful environmental conditions and can resist disease. Typically, this is done by crossing a less vigorous or less resistant cultivar with a more vigorous/resistant cultivar, and then growing out plants that have the combined favored characteristics of both parents. In the Upper Midwest, it is important to grow hop varieties that have been proven to be resistant to the most common fungal and viral diseases. Because the Upper Midwest has a very humid climate compared to that of the lee side of the Rockies, where much of the U.S. hop crop is grown, only a subset of the available cultivars are suitable. The table below lists the characteristics of the more resistant cultivars.

Table 1.2 Hop cultivars suitable for growing in the Upper Midwest. For diseases, T indicates tolerant, R resistant, MR moderately resistant, MS moderately susceptible, S susceptible. For yield, Low = 800 lb/ac, Very High = 2000 lb/ac. Source: Oregon State University High Alpha Acid Breeding Program

Variety	Alpha %	Downy Mildew	Powdery Mildew	Verticillium Wilt	Yield
Brewer's Gold	9.2	MR	T	R	High
Fuggle	5.1	R	R	MS	Low
Tettnanger	4.5	MR	?	R	Low
Willamette	6.6	MR	MS	MS	Very High

Challanger	8	R	R	R	Low
Cascade	6.3	MR	R	R	Very High
Eroica	12	MR	MR	R	Very High
Nugget	13	R	MR	R	Very High
Chinook	13.6	MR	T	R	Very High
Mt. Hood	7	MR	MR	R	Very High
Liberty	5	MR	MR	T	Very High
Ultra	4	MR	MR	MR	Very High
Magnum	15	MR	S	R	Very High
Sterling	7.5	MR	MR	MR	Very High

Cautions

As a hop grower, you will be in the hop yard and exposed to hop plant materials for extended amounts of time, and therefore exposed to many occupational hazards. During the establishment year and when performing plantation maintenance, you will be doing a lot of "high work". Falling, tripping, and electrical hazards are all present. Practicing ladder and scaffolding safety, wearing a safety harness and hardhat, using motorized equipment safely, and keeping the worksite clear of tripping hazards and extraneous persons are all essential.

Hop plants themselves also pose potential hazards. The rough leaves and stems of the hop bines cause skin abrasions and dermatitis in sensitive individuals. And since the plants are outside collecting dust and bacteria, the tiny barbs of the plant can introduce infection to the wounds. When training bines in the spring, pruning in summer, and harvesting in fall, it is best to wear long sleeves and long pants to protect your skin. Cleanse any wounds promptly.

The sedative and estrogenic effects of hops can become a hazard during harvesting and processing. In the olden days, when hops were hand-picked, women, old men and children usually did the hop picking, while the young and middle-aged men severed the bines and brought them to the pickers. Why? Because of the dangers of exposure to lupulin absorbed through the skin and lungs of the pickers. It was reported that all women would begin to menstruate within two days of beginning work. Pickers would also suffer from "hop haze" due to the sedative effects of the hops. Excessive exposure to lupulin is reportedly responsible for gynecomastia ("man-boobs"), and brewer's droop (erectile dysfunction). Today, growers and processors should avoid excessive exposure to lupulin by wearing gloves when hand picking and wearing a dust mask or respirator when processing hops. It's also a good idea for pregnant women to avoid continued exposure to hops.

Summary

The hop plant is a long-lived herbaceous perennial that grows climbing bines in excess of 20 ft. The female hop plant's flowers are harvested for beer brewing and medicinal uses. The lupulin produced in the female flowers contains bittering, aroma, flavor, and preservative qualities for beer. The lupulin also has sedative and estrogenic effects, causing hops to be used medicinally. Care should be taken to avoid excessive exposure to lupulin.

Chapter 2 Location, Location, Location

Introduction

The most important step in the entire process of growing hops commercially is to choose the proper location. As hops are perennials, they cannot be moved from year to year. We urge you to invest serious consideration into site selection as it is directly related to good yield. If you live near the climate limits of where hops can be grown, spend even more time investigating potential sites as it will not be simply a matter of yield reduction but instead a matter of no yield at all!

Day Length and Growing Season

The hop plant is adapted to life in latitudes midway between the equator and the poles. It needs a chilling period (vernalization) to drive it into winter dormancy. The plant also requires an alternating warm period to spur growth. Photoperiod (the changing day length in relation to seasonal change) triggers flowering and maturity. Without the appropriate photoperiod the plants will not flower and only grow more and more vegetation. These requirements provide hard limits to where hops can be grown.

In order to experience the proper photoperiod, hops can only be grown pole-ward of 34 degrees latitude. Hops growers can rest assured that they will never need to compete with farmers in the tropics! In the United States, this photoperiod requirement dictates that hops can be grown from northern Texas to southern Canada. For a crop to reach maturity, a growing season of 120 days or longer is required and can be found as far north as Minnesota and the Dakotas. However growing season (unlike photoperiod) is much more variable. Microclimate plays a large role in providing an acceptable hop growing location in locations otherwise deemed too hot or cold.

Light intensity (the amount of light hitting an area) is not to be confused with photoperiod, or the duration of light. Hops require intense sunlight, so perpetually cloudy or foggy locations will not be amenable to hop growing. For example, the Pacific Northwest (where most of the hops are produced in the US) are grown on the east side of major Rocky Mountain ridges where it tends to be clear as opposed to the Pacific coast side which is often cloudy.

Assuming you are located at 34 degrees or higher, the best place to determine if hops are suitable to your location is your state climatology office or the National Climatic Data Center. They have records of temperature and rainfall for cities in your state for the past 100 years or more. They will have computed statistics for daily maximum and minimum temperature, rainfall, and other growing season measures. These data will most likely be presented in terms of "normals". [*The term "normal" refers to an average over the most recent 30 year period, beginning in a "1" year. For example, the current normals for the year 2010 are averages for the period 1971-2000. In 2011, the normals will switch to averages during the period 1981-2010. "Normal" in this sense does not mean that the weather will always be like that.*]

Weather is a function of climate and climate changes from decade to decade. The normals are recomputed every 10 years to include the most recent decades to keep up with climate trends,

To use climate data find the closest data station that has weather similar to your location. Next, find the average length of the growing season or count the number of days between the last average frost day in spring and the first average frost day in autumn. If the number of growing days at that station is 120 days or more, your location is likely suitable for hops.

Next study the precipitation pattern. Look for the number of rain days (or if you are really lucky, cloudy or sunny days) by month. A rain day implies a cloudy day. If more than half of May through August is cloudy, you may experience lower yields than if the location experienced more frequent sunshine. Also note how much precipitation falls month by month during the growing season. This will help you estimate how much irrigation on average you will need to supply your hops. Hops will consume the equivalent of 30" of precipitation during the growing season (May through August). Pay attention to variability in precipitation, too. If your location is subject to prolonged dry periods interspersed with occasional rain events, you will need to irrigate more often than Mother Nature schedules.

Lie of the Land

If your investigations have led you to believe that your climate is suitable for growing hops, the next step is to select a location for the hop plantation. The slope and aspect of your land affect the placement of your hop field. Generally, south facing and gently sloped land is ideal. This provides the best sun exposure and water / air drainage. The Upper Midwest experiences periods of intense rainfall. High rainfall rates generate more runoff on steeper slopes than on shallower slopes, and runoff leads to erosion. Your hops field is vulnerable to erosion (particularly in the establishment year), so gently sloped land is preferred over steeply sloped land. Another difficulty with steeper slopes is physical access to the plants and trellis. Hops growers often have some sort of scaffolding atop a vehicle to allow them to access the top of the trellis. If your land is steeply sloped, this becomes awkward and even dangerous to operate.

Site exposure to wind is an issue as well. Fully loaded trellises will experience great forces (live load) on windy days. Ideally your plantation will not be located on a windy hilltop or other locations which experience heavy winds and result in damaged cones or trelliswork. Shelter belts of trees can be used in marginal locations to dampen the force of the wind.

Soil

Hops prefer to grow in soils that are deep, fertile, moist yet well-drained, and of moderate pH. Let's start with moisture. The best soil for hops is one that holds plenty of moisture, but is never soggy. Any of the loamy soils are good, but the best is sandy loam because it has enough fine material to retain moisture, yet enough coarse material to allow it to drain very well.

How do you know what your soil texture is? There are several ways. The first is by feel. Many farmers, agricultural consultants and soil scientists have enough experience with soils that they can tell what the soil texture is just by feeling a sample. You may know someone who can evaluate your soil this way. You can also look in your County Soil Survey Book. The USDA has evaluated the soils types in most agricultural areas of the country. You can go to your nearest USDA agency and ask to look at the book. Libraries or local government offices may have a copy. There are on-line, digitized versions for many states as well. If you are using the book version, locate your land with the map (there is one inside the back cover, and another near the front). Find the page that contains aerial photos of your land. When you find your parcel of land, make a sketch of the parcel boundary, and the shapes of the soil mapping units. Put the soil codes on your sketch. Then go to the front part of the book and locate the soil name based on the code.

For example, in Dane County, WI, EhD2 is the code for Eleva sandy loam, 12 to 20 percent slopes, eroded. The soil survey book contains a general description of the soil series (Eleva) and a more detailed description of the subunits in the soil series, which usually describe slope and state of erosion. The soil survey includes much more information than just a soil "feel" test. It contains very important details like the depths, textures and structure of the layers, the depth to bedrock or parent material, and the general fertility. The third way to determine your soil type is to send a sample to a laboratory for a textural analysis. This procedure will cost on the order of $25 per sample, so it's best to narrow down your possible locations first by using the soil survey information. It's also best to test more than one sample in order to capture the natural variability in texture.

Texture alone does not determine a soil's ability to retain and drain moisture. To encourage moisture retention, a soil should have high organic matter content, yet not be a "muck" or organic soil. An ideal level is somewhere between 3 and 10 percent. If your soil has less than 3%, consider amending the soil with compost or growing a cover crop for a year or two in order to increase the organic matter.

Next, hops require a soil that is neither too acidic nor too alkaline. Hops will do well in a soil having a pH between 6 and 7.5. If your soil is a little out of that range, you can amend it with lime or sulfur, but if it is more than about 1 pH unit outside of this range, it's best to select a different site. Soil test results will have liming or sulfur application rates as part of the results if your pH is outside of normal agronomic range.

Fertility of the soil is related to the type of soil, the organic matter, and the depth. Hops need a large root mass in order to supply all that top growth with water and nutrients. Hop roots can go down 15 feet or more, so a site with shallow bedrock is not favorable. Select a location where there is at least 3 feet of material that the plant roots can explore. If the local bedrock is porous or full of cracks, 3 feet of topsoil should be sufficient, but if the bedrock is impervious to roots and water flow (like granite), at least 5 feet to bedrock is recommended.

The soil fertility is also a function of land use history. If your soil has been abused and mined of all its fertility by poor farming practices, it will need improvement. One of the best indicators of soil quality is organic matter. Not only does organic matter improve soil moisture and drainage as previously

mentioned, it hold nutrients and provides good habitat for soil microbes , fungi and critters that make up a healthy soil. Organic matter can be increased by leaving "stover" (the part of plants that is not harvested) on a cropped field for several years, planting cover crops for a few years, and tilling under compost. Structure also affects the fertility of the soil. If your soil has poor structure or has a plow pan, it will interfere with the roots' ability to obtain water and nutrients. Soil structure can be improved with organic matter (it's good for everything!), avoiding compaction (refraining from driving on it with heavy equipment when the soils is moist) and using no-till management (to avoid disrupting natural soil clumps). Chapter 4 contains a more detailed discussion of soil fertility, including interpreting a soil test.

Sunlight

As mentioned above, hops will need lots of sunlight during the season. Long days are of no use to a plant that is being shaded, though, so select a location that gets 8 or more hours of sunlight per day. That means the hops field should be well away from the north, east, or west edges of forested land, not in deep valleys, in the shade of large structures, or on the north side of steep hills. Good sun exposure will not only allow your plants to produce a good crop, but will let them dry out faster after a dewy night or rainstorm. Dry plants are less susceptible to mold and mildew. A few hop cultivars, such as the Goldings, are a little sensitive to strong sunlight and can be burned. These types should be located in a more sheltered location (closer to the woods, in the center of the plantation, etc.).

Moisture and Drainage

The Upper Midwest has a rather moist climate which is both a blessing and a curse for hop growers. The abundant rainfall reduces the amount of irrigation required for the crop, but the potential for saturated soil and long periods of high humidity put hops at risk for rot, mold and mildew. The proper site selection can minimize your risk for the diseases while taking advantage of the moisture.

To avoid excessive moisture, you should pick a location that never floods, seldom has standing water after a heavy rain, and has a water table at least 5 feet below the surface at all times. The big enemy of the hop crown is rot. If exposed to saturated soil for too long, your hops plants will turn into a soggy, slimy, rotten mess. Avoid clayey soils, compacted silty soils and soils in the flood plain. In soils that somewhat slow to drain, increasing the organic matter can help improve the drainage rate.

Air drainage is another issue to pay attention to. In the Upper Midwest, the humidity is usually quite high. At night, when the air cools, the relative humidity often increases enough to form dew and fog. If your plantation is located in an area where cool air pools at night, it will be exposed to dew and fog more often during the summer, and late/early frosts at the beginning/end of the growing season. Since excessive humidity encourages the growth of damaging mildews and molds, and frosts can damage the crop, locate your plantation where cool air can drain away from it during the night. Valley bottoms, "frost pockets" and small fields surrounded by dense forest or fields located directly above dense woodlands are to be avoided. Also avoid foggy bottomlands, such as in river valleys, and former wetlands.

Access

Last but not least, consider how you will access your hops. You will need to bring heavy machinery into the field at least during the establishment phase. You may need to get tractors, mowers, wagons, or picking vehicles into the plantation and between the rows regularly. And you will also need some efficient, safe way to reach the tops of the trellises for stringing twine and performing trellis maintenance. Physical access to the field must allow all these activities. Ditches, wet ground, trees, steep slopes, fences, buildings and power lines can all interfere with access. Also consider that you will probably need some source of electricity to power the irrigation system or a well. It can be expensive to drill a well or run new power lines.

Summary

Many factors should be considered when selecting a site in which to grow hops. Climate determines whether or not you may be able to grow hops in your area. Below is a summary chart to help you decide on location once you have determined that your climate is suitable

Table 2.1 Selection factors for locating a hop plantation.

Factor	Good location	Bad location
Soil texture	Sandy loam or well-drained loam, silt loam, sandy clay loam	Clay, silt, pure sand, silty clay, sandy clay
Soil pH	6 – 7.5	<6 or > 7.5
Soil organic matter	3-10%	<3% or > 10%
Depth to water table	>5 ft at all times	<5 ft during part or all year
Depth to bedrock	>3-5 ft	<3 ft
Flooding	Never	Annually
Standing water	Seldom or never	Regularly
Air drainage, wind	Cool air drains away freely, not too windy	Cool air pools or windy location
Slope	Flat or gently sloped	Steeply sloped
Sun exposure	>8 hours direct	<8 hours direct
Access	Freely accessible by large equipment spring-fall; power and water available nearby	Limited access all or part of growing season; no power or water nearby

Chapter 3 Establishing a New Field

Introduction

Now that you have identified a location for your hops plantation, let the hard work begin! We recommend that you start laying out your plantation and installing the infrastructure at least 6 months before you plan to plant. One year is better. The more you can get done now, the sooner you can get your plants in the ground come spring time. And keep in mind that if you have to amend your soil, some things take time. For example, if you need to lime your soil, it takes several months for the pH to begin to drop. Too many tasks delayed until spring may delay you from getting your plants in the ground, reducing their growing time, and setting them back on their path to maturity. Or a too-busy spring may prevent you from getting your irrigation set up in time, starving your tender fist year plants for water and nutrients. So take your time doing the tasks in this chapter even if it delays planting for a year.

Field Layout

There is no one perfect way to lay out a hops plantation, since every location will differ in slope, aspect, drainage, wind exposure and access. Sometimes you will have competing requirements. Go with the layout that is the least harmful on average. Start with photos and a sketch of the site. It's a good idea to use graph paper so you can draw to scale and measure distances on your sketch. Maps with topography and soil type may come in handy. Walk the field to get a sense of the small variations in topography, vegetation, drainage and soil. Make notes on your sketch. Then think through all the processes that will happen in the plantation: sunlight and shading, runoff, air drainage, equipment entry, equipment turn-around space, etc. Remember to consider room for any expansion, future fencing or equipment needed for intercropping if you plan to do that.

Most modern hop yards use trellises 16-20 feet tall arranged in long parallel rows spaced 7 to 12 feet apart. You will want to line up your rows so that sun and air drainage are maximized, without impacting access or requiring you to have dozens of short rows. For example, the hops will get the best sun exposure when oriented north-south. But if north-south orientation causes cool air to pool in the plantation, or would require you to turn around the end of your rows in a very tight spot, maybe orienting them at a different angle would be preferable. You can compensate for shading by spacing the rows wider apart. Since you will probably be planting your hops in long, somewhat raised beds, having the beds meander near the contour may cause excess water to collect between rows. If the water gets deep, it can "blow out" through the rows, causing gully erosion. Having the rows on at least a gentle angle with the contour is safer unless you can get a very accurate on-contour survey.

Sketch out where you think the rows would be best layed out. How much total row length do you have? Is there enough room between rows for equipment plus clearance? Do you have enough room at the

ends of each row to turn around? Be sure you have included an extra pole-height's-worth of space at each end of each row for guy wires. Are there any large features adjacent to the field that may shade your plantation? Then mark the location of your irrigation equipment and power access. Do you have enough room to get around all this with your mobile equipment?

Check your map notes again to make sure there are no natural features that will interfere with access, water flow, or air flow. Next go out to the site with a friend and stake out the rows and stationary equipment locations you have sketched on your map. Measure the clearances, row separation, and row length to double-check your map. If you have one, walk the plantation area with a long pole as if it is one of your trellis poles, or your mobile scaffolding. Are there trees or power lines in the way? Adjust your layout as needed.

As one last check, make 4 foot deep test holes at each of the four corner trellis pole locations. End poles need to be seated in at least 4 feet of soil. Your inspection of the County Soil Survey book should have indicated the approximate distance to bedrock, but topsoil depth will vary within the soil unit. In glacial areas, you may encounter unpredictable boulders! Hopefully these are small enough in size that you can move the pole location a few feet to avoid them. Boulders at the surface are strong indicators of boulders below. If you hit bedrock before 4 feet, you will need to adjust the location of the plantation, plan to drill into the bedrock, or anchor the poles with cement. It is much, much cheaper to move the plantation location before you begin. Low trellises are also an option if you have shallow bedrock in all locations – see the Trellis Types section later in this chapter.

Soil Preparation

While you are out at the site doing the final layout of your plantation, take along a shovel or soil probe, a plastic bucket and some soil sample bags. Take at least 5 samples of soil spread over your field. If the Soil Survey shows you have more than one soil mapping unit (soil types) in your field, be sure to get at least one sample per unit. A corn or soybean yield map, if one is available, is very helpful in allowing you to determine if the approximate soil mapping unit boundaries from the Soil Survey are in the right place, because yield tends to vary with soil type. Adjust your sampling pattern as needed to capture all the variability on your field. Your soil samples should include an even mix of soil from the top 6-12 inches of soil. It is recommended that each sample actually be a composite of at least 10 individual samples from a small area. Mix well and put a 2 cup subsample in your sample bag. A soil probe, which takes cylinder-shaped cores, is ideal for this – you may be able to borrow one from your local Extension office or soil testing laboratory. Also take at least two deep samples, which will include an average of the soil down to 4 feet. You can use the soil dug up from your 4 foot test holes. Number each bag and write on your map where you took each sample. Submit your samples to a soil testing laboratory and request the standard farm field soil test for each sample and the calcium and magnesium test and the sulfate-sulfur tests for a fraction of your samples. The results from this test will determine whether you need to amend your soil before planting. The shallow samples will represent the soil conditions your first year plants will experience. The deep samples represent what the mature plants will encounter. See Chapter 4 to learn how to interpret soil test results and guidance on amending soil pH and fertility. An agricultural consultant can help you with soil sampling and soil test interpretation as well.

With soil test results in hand, you may realize that the soil at your chosen location is not suitable for hops production. While this may be bad news, it is better to stop now or look for a new location before you spend any more funds on a hopeless money-pit of a project.

A fortunate few of you will find that you have perfect soil and no amendment is necessary. More likely, though, is that you will need to amend your soil in some way to bring it into the correct pH, nutrient, or organic matter value. Fall is an ideal time to amend your soil: the crop is off, the soil is dry and easy to work, and soil amendments may be on sale. Apply your amendments as recommended in Chapter 4. Any material that should be broadcast spread should be put down first. If you have your rows layed out, you will know exactly where to apply your compost or other row-only amendments. You can form your long raised beds and plant a temporary cover crop at this time, too.

Trellis Types

After you have a final plantation layout, it's time to design your trellis. Most modern hop yards use trellises arranged in long parallel rows spaced 7 to 12 feet apart. Trellis poles are connected via the main line wire which runs near or at the top of the poles 16 to 20 feet above the ground. Poles should typically penetrate at least four feet into the ground unless secured by triangular bracing or guy cables. No more than 10% of the poles should be stabilized this way as too many shallowly-seated poles can lead to overall trellis instability. Soil depth should be determined prior to any hop yard construction. It is much easier (and cheaper) to redesign and or relocate the plantation before poles are ready to be set.

Once the hops are mature they form a wall of foliage against which wind will apply force. Therefore it is essential that rows longer than 100 feet have cross wires attached to the top of the trellis oriented perpendicular to the row. In this manner a stable grid is formed which will resist wind loads. The cross wires may be attached at each pole but may only be needed every other pole in more wind-protected areas or in lighter density plantations.

Other trellis designs are more suited to display gardens or historical recreation than contemporary commercial production. The tent trellis is a common historical and display design that features a single central pole from which several wires radiate at approximately 30°, terminating at the ground. This design allows for simple, quick construction but creates heavy shading and plant competition at the top of the pole. Harvesting can also be difficult as the plants will be well entangled come late summer.

More traditional trellis designs use a symmetrical seven foot pole and plant spacing. This 7x7 spacing allows for easy cultivation in two directions and is better suited for some varieties that do not perform well in higher density plantations. An evolution of this 7x7 design is the arch or canopy design. In this system bines are trained up drop lines at angles to create a tunnel-like effect allowing the plant to grow longer with the hopes of higher yields. But this design presents harvesting issues as well as shading and air flow difficulties. Given the growing conditions and horticultural concerns of the Upper Midwest, this manual will concern itself with parallel row trellis designs in both low and high density configurations.

Standard hop varieties require at least 16 feet of trellis above ground in order to yield a maximum crop. Shorter trellis designs, while cheaper to build and easier to maintain, will reduce the yield and shorten

the lifespan of the plant. There are a few dwarf varieties (e.g., Summit, First Gold) that can be successfully grown on short (8-10 foot) trellises, but these varieties are not as readily available as the standard varieties at this time. It is recommended that you secure a source of dwarf rhizomes before committing to a short trellis system, if this is your plan.

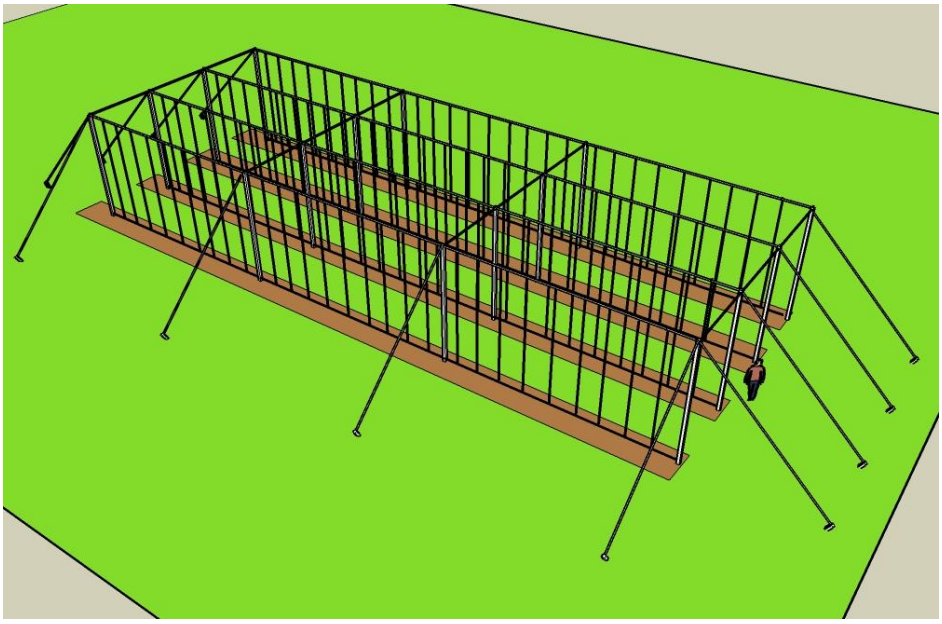

Figure 3.1 Illustration of high density trellis: 10ft row spacing with 3 ft plant spacing.

Poles

The poles of the trellis are the legs for the main wire. In this way they carry the load from the plants and the forces acting upon them (wind mostly) to the ground. The poles must be rigid enough to carry the vertical load and flexible enough to bend without breaking under lateral loads. Several pole materials fit the performance bill but carry much different costs.

Wood ($$-$$$)

Wood is a time-tested, easily obtainable, sustainable material well designed for the hop trellis. It is ubiquitous in the utility and construction industries and relatively cost-effective. But it is an organic material and subject to decay when exposed to the elements, as a hop trellis must be. Therefore many poles are available made from decay resistant woods like cedar or redwood or pressure treated with copper compounds preferably without arsenic. However, cedar and redwood poles can be quite costly (3-4 times the cost of untreated conifer poles) and treated poles cannot be used in organic production. If the hop yard is not to be certified organic, then treated wood is a very good choice for both cost and longevity. Expect 20-24 ft poles to be eight to ten inches in diameter at the butt and 6 to 8 inches at the tip. Prices fluctuate with the lumber market and can cost anywhere from $80/pole (untreated conifer) to $200/pole for cedar or redwood from utility pole suppliers.

Another quite viable wood is Black Locust which abounds in the Upper Midwest as an invasive species. It is fast growing, very dense and extremely rot resistant. It tends to grow tall and straight and is often used without any milling; simply de-barked and cut to length. It can be difficult to locate in large quantities but is most likely to be a considerable portion of woodlots in the region and a benefit to the native tree species if removed.

One last wood pole type to consider is the LLP, or laminated lumber pole. The LLP is comprised of sawn dimensional lumber of various lengths glued and fastened together to make up a pole of any length. it should be constructed from single-length boards with no splices as these are quite weak. Shorter closer spaced poles can be made from double 2x4 lumber, while taller poles should use double 2x6 for the line poles and tripled for end poles. A pneumatic nail gun with coated spiral shank nails is an inexpensive fastener for the LLP but beware of their holding power. Splurge for the stainless steel screws often used in high-end decks. Bolts are another option but considerably more expensive. Expect to pay $25-$40/pole for the lumber, etc. excluding labor. For a hop yard on a budget this is a viable option.

Metal ($$$-$$$$)

Steel is an obvious choice when it comes to tall poles. It is quite strong and flexible and not subject to decay. But it is subject to oxidation (rust) and should be either galvanized or otherwise coated to slow oxidation. Three-inch diameter well casing with ¼-inch sidewalls is a common pole size up to 20ft. Steel requires different fastening techniques and can be more difficult to work with, requiring annual maintenance to remove rust. Steel pipes as poles are comparable to treated poles in cost (~$80) and subject to commodities markets. It is a good alternative to treated wood in organic operations.

Aluminum is another metal well suited to the hop yard. It is much lighter than steel but just as strong and not subject to rust. It can be up to three times the cost of steel and a bit more difficult to source. It is often found from vendors specializing in aluminum irrigation pipe. Do not be tempted to opt for less expensive thinner walled pipe as buckling may occur. Three-inch diameter minimum and ¼-inch sidewalls are a must. Be aware of the possibility of a galvanic reaction where aluminum and steel meet, such as where the main and guy wires connect to the pole. Use isolating connectors or rubber or plastic washers to prevent premature trellis failure. It is advisable to use the cross-wire stabilizers with any metal poles.

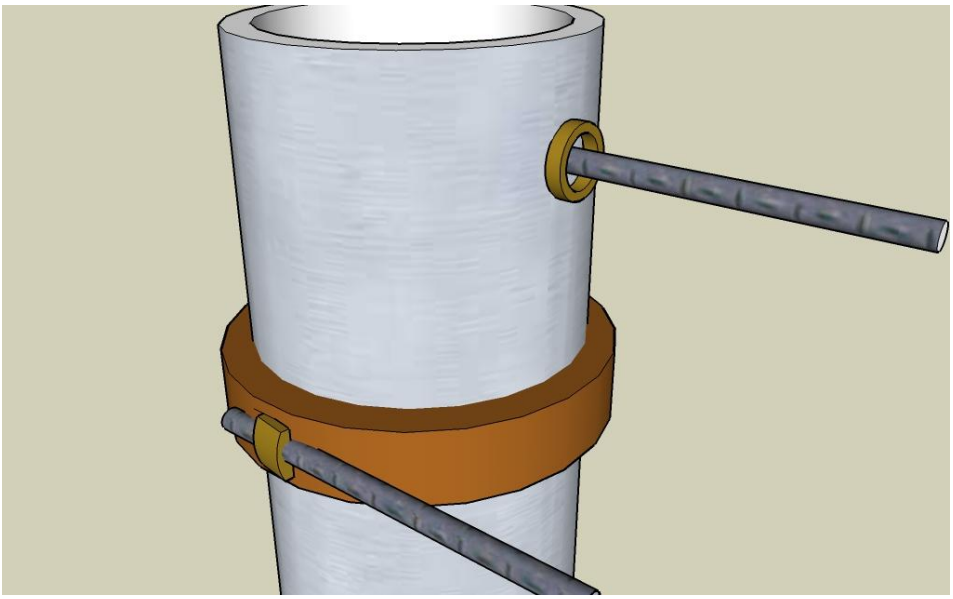

Figure 3.2 Use non-metallic grommets and band clamps to attach steel lines to aluminum poles.

Imagine an acre of metal trellis poles raking the sky as dark clouds roll overhead. Regardless of what type of metal is used, lightning strikes should not be surprising. While the trellis should be well grounded by virtue of being planted four feet deep, a lightning strike will generate intense heat, melting main and guy wires and cooking plants. You've been warned.

Plastics and Composites ($$$$$)

Fiberglass and polyester resins are common pole-making materials for the utility and industrial lighting sectors but may prove too expensive for commercial scale hop operations. PVC and ABS may seem tempting but are extremely difficult to find in sections longer than ten feet and quickly become prohibitively expensive at very long lengths. The sidewall thickness is not generally thick enough to provide vertical stability and will make for a wobbly hop yard, it they could even be procured. Schedule 40 should be completely avoided. Schedule 80 and better are the only considerations and can often be found commercial electrical supply vendors. Lastly, concrete composite "poles" are again used by the utility industry and quite expensive. While they are not likely to be used they cannot be excluded as a possibility.

Main Lines and Guy Wires

All lines in the trellis are under constant tension with periodic strain loads generally from wind gusts. The main line running at the top of the poles experiences deflection load perpendicular to its length from the weight of the hops growing up the drop lines. Increasing plant density increases the load on the main line. Plant density and row length must therefore be known prior to choosing the appropriate

main line gauge. As an example, a 300 ft long row of hops planted three feet apart with each plant weighing 20 pounds at maturity impart 2000 lbs of load to the main line. To resist sag the main line must be drawn taut imparting several hundred pounds of load. Wind blowing against the draping bines adds to the load. The main line gauge must be chosen appropriate to the load imparted. Galvanized wire and cable (often referred to as wire rope) are common choices for both main line and guy lines.

Wire rope or cable is simply a bundle of thinner wire wound together, twisted similar to fiber rope. This allows for large diameter members to remain flexible and workable relative to a single strand wire. Any cable or wire will have a working load rating and failure load rating. The failure load is typically five times the working load. Exceeding the failure load will, as the name indicates, impart failure if that load is sustained. Most cables will allow momentary failure loads without breaking, such as when the bines are under wind load. Wire rope and cable require suitable fasteners, clamps, thimbles, etc. Heavy gauge wire can be twisted and wrapped around eye bolts and turnbuckles like twist ties (albeit very stiff twist ties).

Guy wires provide tension from the end posts to the ground anchors. When combined with turnbuckles, they are the active tension members. Twisting the bolt in the turnbuckle draws the guy wire tighter which in turn draws tension on the main line. Guy wires should angle 45° to the end post. Anchor points should be stout and able to resist the guy tension without bending or becoming unearthed – remember, soil tends to become soft when wet, so it may prove necessary to secure your anchor point with concrete. Some anchor point examples are deep buried short posts (wood or otherwise), concrete columns such as Sonotubes[tm] or the like. Be cautious of burying the guy attached to concrete blocks. While this is common in some areas, the guy is at risk of corrosion and failure when in contact with the ground. Any line under tension is capable of spectacular damage if it fails. Instead bury a short post at a 20° angle in the opposite direction from the guy (see fig 3.3). Use clamps or eye bolts to fasten the guy wires. This is a good place for a turnbuckle. Fasten the turnbuckle to the anchor point with the bolts run out 80-90%. Measure the wire to the turnbuckle pulling as tightly as possible and make the appropriate connections. Tension should be applied evenly from both ends of the row simultaneously. Tighten the line by twisting the turnbuckle and stop when moderate resistance is felt. The lines will stretch so tensioning a couple of times per week may be necessary in the beginning.

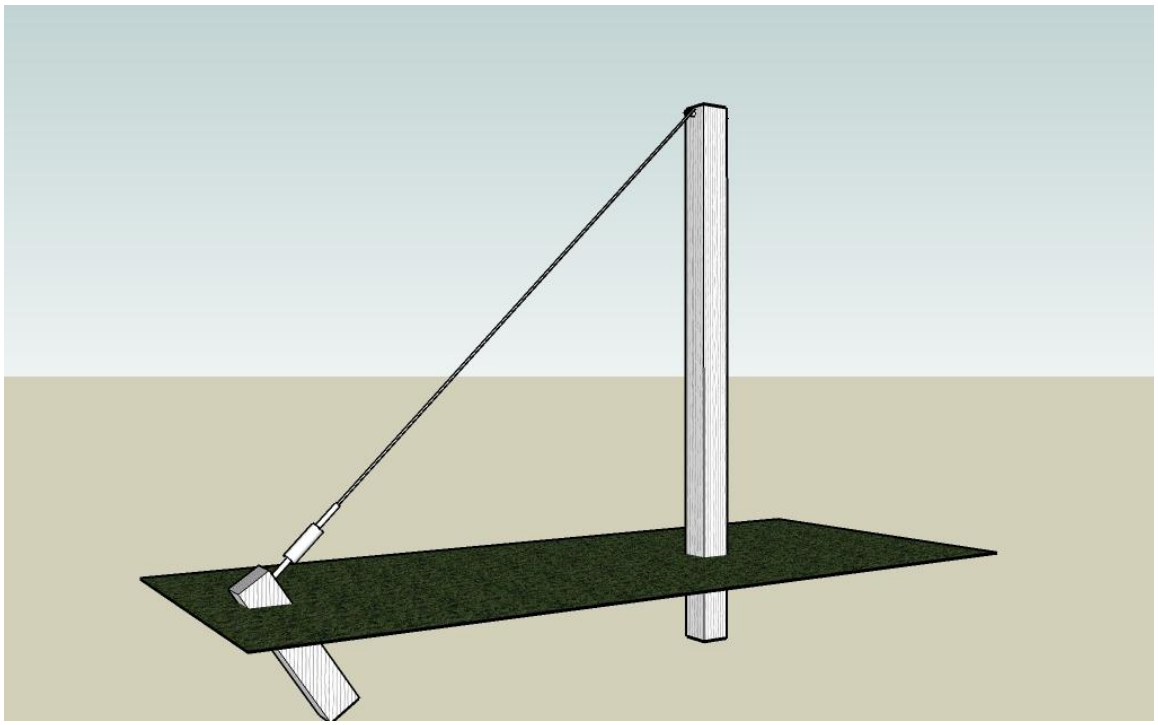

Figure 3.3 “Dead Man” shown in relation to end pole with turnbuckle.

Drop Lines (Trellis Lines)

Drop lines are the strings that “drop” from the main line to each plant. In mature hop yards the drop lines are tied to the old woody stems of each plant but in new establishment this is an issue. A second line (wire or nylon) can be run from end pole to end pole at approximately 6-10 inches above the ground. Drop lines can be tied to this bottom line quite easily. In some areas “W” shaped clips are tied to the drop line and subsequently pushed into the ground with a special tool. While perfectly suited to the task this entire process can be labor intensive and costly, with hundreds of anchors below the soil surface

Drop lines need to be resilient and grippy, so fiber-based line should be used. Coir and hemp are natural choices for sustainable operations and can be composted along with the leaves and bines at the end of the season. These materials are well suited to more than one season’s use. Synthetic line is more durable and can be reused for more the one season as well Sisal “baler” twine is generally not strong enough to carry a full plant load and tends to fail mid-season. Synthetic materials are an option but generally do not provide enough grip for bines and tend to stretch under a full plant load. No matter which material is chosen be aware that there will be much knot tying in the spring.

Drop lines must be attached to the main line some 16-20 feet above the ground. There is no magic to this. Some use a platform fixed to tractor forks to elevate a person to tie the drop lines. Others tie wire hooks to the ends of the drop lines and use a long pole to attach it to the main line. Still others simply double up on line and toss it over the main with a heavy weight.

Trellis Installation

It is a good idea to install your trellis after your soil is amended and your beds layed out, but before planting. There is nothing magical or technical about digging holes and dropping posts. Post holes are best dug with a power auger attached to a tractor, skid steer, etc. Even though one- and two-man augers are available for rent, do not be tempted to save a few dollars at the expense of back muscles and biceps. There will be much muscling when the poles go in the ground. An eight-inch auger is the smallest bit recommended for a dimensional lumber pole. For utility poles, plan on using at least a 16-inch bit. An oversized hole not only allows for some wiggle room, it helps when clearing rocks and other subsoil irregularities.

Holes should be 4 ft deep for adequate pole stability but bedrock and large boulders can get in the way. Shallow bedrock should have been identified during the site selection phase and dutifully avoided. In some cases bedrock may lie just below the soil surface at slope drop-offs, ridges, and hillocks. Drill as deeply as possible in these locations. Some bedrock like sandstone becomes "rotten" and can be drilled into with some effort and a standard auger.

Figure 3.4 Power auger makes quick work of digging holes.

Figure 3.5 Shallow hole drilled into sandstone.

Other bedrock types may require carbide auger bits or jack-hammering to prepare an adequate hole. Frost heaving is unlikely when the pole is resting on rock but the hole should be at least 2 ft deep to support the pole from excessive wobble. Concrete can be added for extra stability. Ideally there will be very few if any of these troublesome holes, but do not be surprised if one or two pop up.

It goes without saying, before any poles go up install hardware at the top of the pole to save much cursing later. When using laminated dimensional lumber arrange all the poles in the same orientation, with the stiffest side of the pole pointed in the direction of the wind load. If the poles warp, having them in the same orientation will reduce any zig-zagging down the row. 2x4 laminations are generally light enough for one person to tilt into the hole. 2x6 constructions are much heavier and likely to require two people. Utility poles and steel casing poles will likely require machinery to hoist and place. A tractor with a front loader is commonly used as is a boom lift.

End Posts and the Deadman

To tilt or not to tilt the end posts – that is the question. Some growers insist that the end poles be installed on 20-30 degree outward slant with the guy wire running straight down to the deadman. Other prefer to install the end poles perpendicular and angle the guy line to the deadman. It is completely the decision of the grower as to which configuration suits the needs of the plantation. However, only the latter configuration will be discussed here.

All of the tension from the lines and cables must terminate somewhere. The force in the main line will be pulling against an anchor buried in the soil. This anchor is called a deadman and is generally made of either a short section of timber or a concrete column. A hole is augured into the soil at a distance away from the end pole equal to the end pole's height. The hole may be drilled straight down, or the auger tilted at a 20-30 degree angle away from the end pole. This will help resist the force of the line tension. In softer soils, anchor the bottom of the deadman in the soil with concrete to help resist being pulled out. Bury the rest of the post and leave 10 to 12 inches above the soil surface; similar instructions apply for concrete tubes or forms.

Once the poles are in the ground soil must be densely packed around it. Again, nothing too technical here, just lots of manual tamping. Any tool with a blunt, wide end that fits between the post and the side of the hole will do as a tamping device. 2x4 lumber works well but can be difficult to handle. Spud bars have enough mass but will wear out the labor quickly. Try a hollow pipe or PVC tube with several layers of plywood stacked to make a foot. Fill the pipe with sand and cap. It should provide enough mass to compact the soil without wearing out the arms too quickly.

Stringing the Main Line

The main line is the cable that runs across the tops of the poles and from which the drop lines hang. It is critical that the main line be under enough tension to prevent sagging but not so taut that wind loads might break it. The length of the main line should not exceed more than 300-500 linear feet without a disconnection. Very long continuous main lines have a tendency to break, dropping hop bines and requiring significant work to reinstall. Main line wire gauge is variable, depending on the run length. Use the table below to help in choosing a wire/cable gauge for the main line.

Table 3.1 Main line cable size requirements.

Line Length	Cable/Wire Rope
50 to 100 feet	1/8-inch 7x19 or heavier
100 to 300 feet	3/16-inch 7x19 or heavier
300 to 500 feet	¼-inch 7/19 or heavier

Attachment and Pre-tensioning

Once the poles are erected, the main line is attached to the hardware on one end pole. The attachment method is determined by the type of pole used. Square or laminated poles should use an eyebolt or other mechanical attachment point. Simply looping the main line around the square pole will put undue stress on corner points. It is better to use a thimble through an eye bolt to evenly distribute the line tension. Thimbles are not necessary on round poles since the pole shape evenly distributes the load on the line. Thimbles are available at most hardware stores and farm supply stores. Vendors selling rigging supplies (including cable and wire rope) will also have thimbles available.

Wire rope and cable is clamped around the pole hardware using u-shaped wire rope clips. They are designed to squeeze the cable together to secure a loop. Two clips are required per attachment point. Be sure to position the rope clips so that the u-shaped portion of the clip is in contact with the side of the cable that has tension on it. This prevents the clamp from cutting through the cable. See figure 3.6 for more detail.

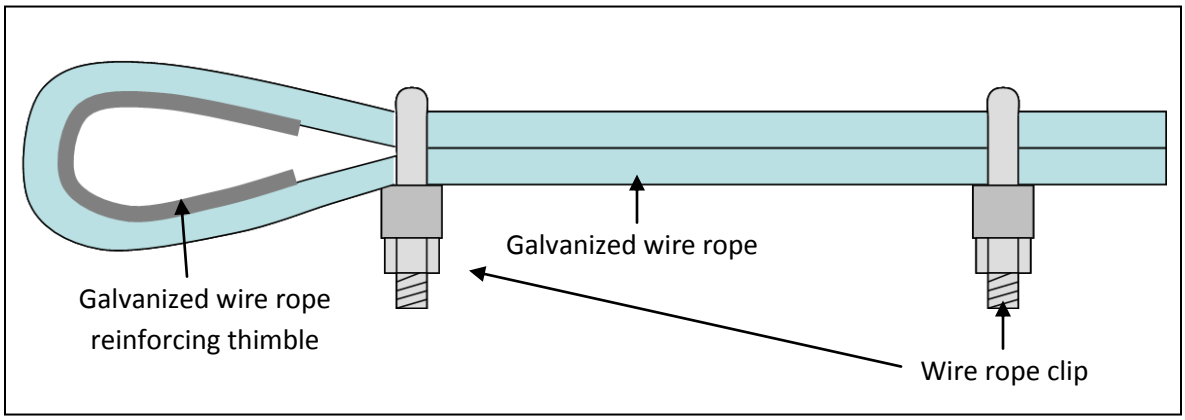

Figure 3.6. Wire rope or cable fastening arrangement using a thimble. The cable loop passes through the eye of the bolt fastened to the pole. The thimble reinforces the loop so the cable will not kink. Wire

rope clips compress the cable together to hold the loop fast. In this figure the tension is on the top end of the wire rope and the bottom end is the loose end.

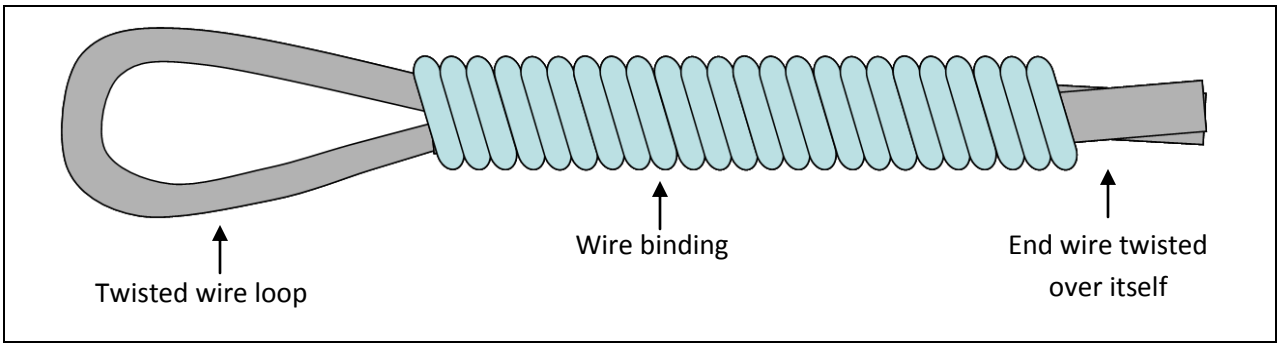

Figure 3.7 The fastening arrangement for single or double strand wire. In this instance the wire is passed through the eyebolt and wound around itself, making a loop. The wound end is then wrapped with thinner gauge wire binding to ensure the main line does not slip during tensioning.

Once one end of the main line is attached to one end pole, it must be strung to the opposite end pole or an intermediary line pole and attached. The line pole attachment method will dictate how to proceed. If the main line will be attached to the line poles with heavy duty galvanized u-staples or with other clamping hardware, then the main line can be strung to the end pole and pre-tensioned to hold it in place while the line pole hardware is set. Set the hardware so that the main line is free enough for tensioning; the hardware will be tightened later. Once the main line is supported along the entire length of the row it is time to turn attention to the guy lines on the end poles.

Guy Cables

The end poles are secured to the deadman posts via the guy cable. This cable will provide stability to the end posts preventing them from bowing inward as tension is drawn on the main line. The load exerted on the row is ultimately transitioned to the guy lines so they must be sized appropriately. Cable gauge is determined by the length of the main line. Use the chart below to help determine the appropriate cable gauge based on working load.

Table 3.2 Wire rope gauge and working load limit chart[1]

Wire Rope Gauge	Working Load Limit
0.25 inch 7x19 galv. wire rope	7,000 lbs
3/8-inch 6x19 galv. wire rope	11,800 lbs
½-inch 6x19 galv. wire rope	20,300 lbs
5/8-inch 6x19 galv. wire rope	32,200 lbs

Guy cables are attached to the end poles using eyebolts, thimbles and wire rope clips illustrated in figure 3.6. The guy cables are attached to the deadman post via a turnbuckle bolt that allows for tensioning to accommodate for cable stretch. Figure 3.8 illustrates the turnbuckle and deadman post configuration.

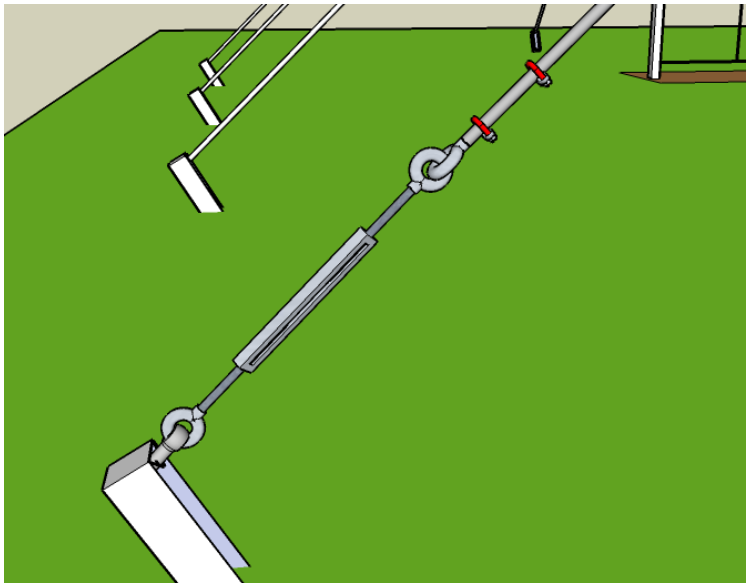

Figure 3.8 Turnbuckle, deadman, and guy cable configuration.

Cable Tensioning

Once both end pole guy cables are installed it is time to take tension on the main line. During the pre-tensioning stage the line was pulled hand tight and temporarily fastened. Now the line must be pulled tight but the ends need to be free to have clamps attached or wires wrapped. This is accomplished by using a cable pulling grip and a cable winch to apply tension to the line five to six feet back from the end pole attachment point. This will allow for adequate tension to be placed on the line while leaving the

[1] Safeland Industrial Supply, Inc. www.safelandindustrial.com

line ends free for attachment. Cable or wire pulling grips are available through most rigging supply stores. See figure 3.9 for an example.

Figure 3.9 Wire pulling grip.

The end poles may begin to pull inward at the top as tension is applied to the main line. Have a second person take up tension on the guy cables with the turnbuckles to minimize this distortion. Over a period of time, the main lines will become slack as they stretch under tension and can be tightened by using the guy cable turnbuckles. After the main line is fixed to the end pole and under tension the attachment points on the line poles can be tightened to secure the main line.

Figure 3.10 Galvanized staples or u-bolts may be used to secure the main line to the line poles.

Cross-Trellis Stabilizing Wires

On trellises taller than 14 feet it is recommended that cross-trellis stabilizer wires and deadmen be installed. These cross-wires will help distribute the wind load forces over the entire trellis once the plants mature. Use wire no thinner than 14ga for this operation. Install deadman posts adjacent to the outer line poles on the perimeter of the hop yard. Stabilizing wires are stretched from the deadman up to the line post at an angle similar to that of the end pole guy cables. The cross-wire is firmly attached to each line pole and terminated on the opposite side on the trellis at another deadman. In the end,

each row will have a heavy main line running the length, with a cross wire perpendicular to it at each line post.

Irrigation Systems and Setup

There is really no way to avoid having to irrigate your hops. Even if there is groundwater that will be readily available to your mature hops, the young plants will not have deep enough roots for at least the first couple years. The irrigation system will likely take quite a bit of time to plan and install unless you have a readily available source of water and electricity in your field already.

We do not recommend overhead or furrow irrigation. These methods encourage mold and mildew growth. Neither do we recommend soaker hose or irrigation tape, as these are prone to clogging, do not pressure regulate, and don't last many years. Instead we recommend drip irrigation, where the irrigation hose is attached to the lowline, and an emitter is placed at each plant. More detail on irrigation set-up and design is presented in Chapter [ref #].

Selecting Varieties

When it comes time to select hop varieties for your plantation, start with the list of disease-resistant cultivars found in Table 1.2. Select at least two, preferably three different types of hops so that it is less likely that a single disease or pest will attack your entire plantation. It also pays to select varieties that have differing maturity times. This allows you to harvest and dry one variety at a time instead of having to do your whole field at the same time. The length of your growing season will limit you from growing some of the latest-maturing types. USDA and other commercial hop production websites have this information readily available. A generalized table of varieties and characteristics is presented in appendix [ref #]. Other factors which may influence your decision are productivity, plant vigor, and brewer demand.

It is possible that the varieties you selected may not actually be available (or affordable) in the year you want to buy the rhizomes, so have backup choices for each of the varieties you plan to order.

The number of rhizomes you plan to order depends on the varieties you want to grow. High density plantings space rhizomes 36 inches apart. Calculate the number of rhizomes you need based on the separation required and the length and number of rows. Be sure to order a few more than you actually need in order to make up for any bad rhizomes that may have slipped in your order.

Ordering Rhizomes

Because you are a commercial grower, you will be ordering around one thousand plants per acre. Don't bother looking at gardening catalogs – they don't have the number that you need, and will charge too much money per rhizome. Current hop growers are the source for rhizomes. But you do need to be a little choosy from whom you buy because not everyone will sell you high quality rhizomes. Find out from others who have already purchased rhizomes in the past if they'd buy from that source again. It's also a

good idea to buy from more than one source just in case a rhizome seller has work-flow issues or disease problems.

There may be more than one grade of rhizomes offered for purchase. Number 1 rhizomes are the largest and will produce a larger plant the first year. Number 2 rhizomes are smaller in diameter and will produce a smaller plant the first year. Number 2 grade rhizomes will cost less than number 1. Just remember, the bigger the rhizome you get, the sooner your plants will reach maturity-level yields.

You will need to place your order in late fall or early winter in order to secure your rhizomes for spring planting. Your chances of getting the varieties you want at a good price are better the earlier you order. The seller may request a down payment. The seller won't actually dig your rhizomes until early spring, but they do need to know ahead of time how many to dig and package. Expect to pay anywhere from three to seven dollars per rhizome (these numbers are applicable at the time of this writing) for most varieties. If possible, request a specific delivery date so that the seller, who probably has a large storage facility, stores your rhizomes in the proper conditions for as long as possible. Select your delivery date based on the time in spring when you can usually start working the soil. This is highly location dependent.

Assessing Rhizome Quality

When your rhizomes finally arrive in spring, inspect them to make sure you have received rhizomes of good quality. A healthy rhizome will be very firm, have at least two nodes (sets of buds), will not be moldy nor heavily coated in dirt/mud. They will be damp, but not wet. They will not be dried out either. Hopefully your rhizomes will still be dormant. The buds on a dormant rhizome may be swollen, while a rhizome that has broken dormancy will have sprouts. Rhizomes whose sprouts have already begun to leaf out will become stressed if not placed in cold storage or planted immediately.

Figure 3.11 This hop rhizome has broken dormancy. The white structures are sprouts. This rhizome is about 4" long.

Storing Rhizomes

If you receive your rhizomes and are unable to plant them immediately, store them in a cold location that remains just above freezing, like an unheated garage or a refrigerator. You don't want them stored above about 40°F, because they will break dormancy. If they have come wrapped tightly in plastic, open

the plastic a little so that they can breathe. If they seem dry, mist them lightly. You may need to mist them periodically if you must store them for a long period of time. Inspect them from time to time for mold. If you see mold beginning to grow, mist with a 5% bleach solution instead of plain water.

You can create a temporary cold-storage facility by constructing a large box with a waterproof liner in the bottom. Put snow or ice in the bottom of the structure, lay a layer of cardboard or plastic on top of the ice, and then store the rhizomes on top of that. Insulate the top and sides as best as you can to keep the ice from melting too quickly. Just make sure you have some way of dealing with all the melt water that will collect in the bottom of your structure. Replenish the ice as needed.

Summary

Establishing a new field requires careful planning of the layout of the plantation, the trellis, the irrigation system, and plant selection. Your planning should start 6 to 12 months prior to your intended planting date. Soil preparation should be done before installing the trellis and irrigation system. Likewise, the trellis and irrigation should be installed prior to planting. Plan to do these tasks in the late summer and fall before you plant. Order your rhizomes in late fall or early winter to get the best selection and price. Prepare a storage location for your rhizomes before they arrive in spring.

OAST DESIGN OVERVIEW

- 24 chamber modular oast
  - 24 individual 15”x48”x7.5” bins
  - 60 cubic ft capacity
- Single speed, manual adjust fan
  - Single phase reverse incline fan
  - 3500 CFM, 1” static pressure
- Pull-through Air Flow
  - Prevents bed fluidizing
  - Eliminates “blow holes”
- Ease of Loading and Unloading
  - Harvested hops can be placed directly into oast bins
  - Eliminates the need for costly multiple handling steps

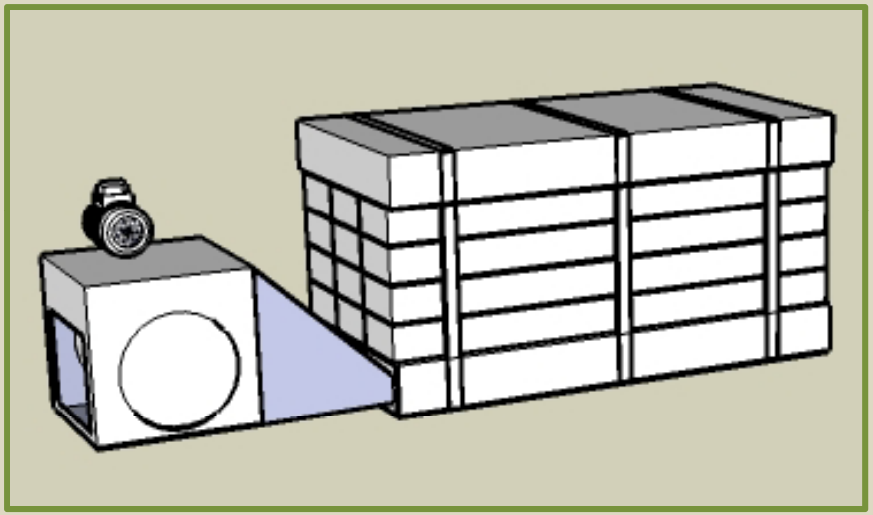

Copyright 2010 Gorst Valley Hops LLC All rights reserved

OAST DESIGN RENDERINGS

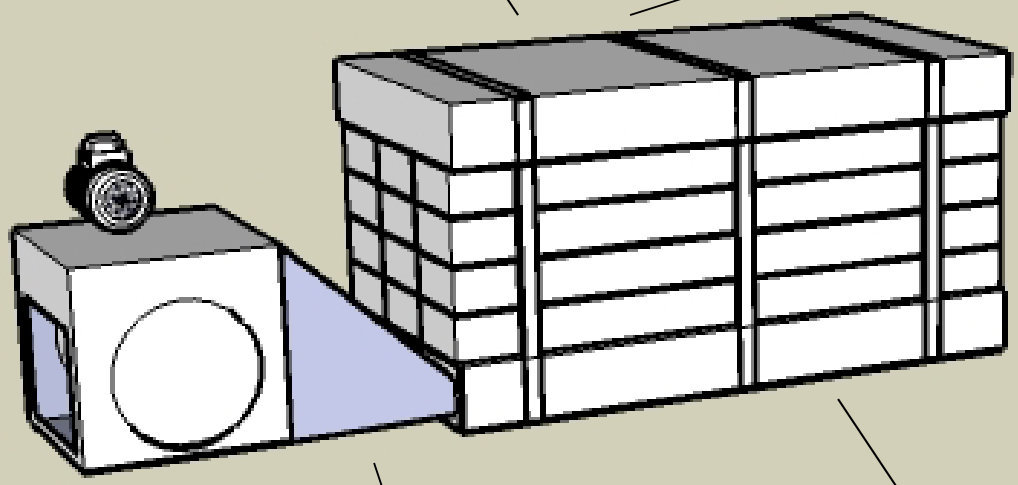

Copyright 2010 Gorst Valley Hops LLC All rights reserved

OAST DESIGN RENDERINGS

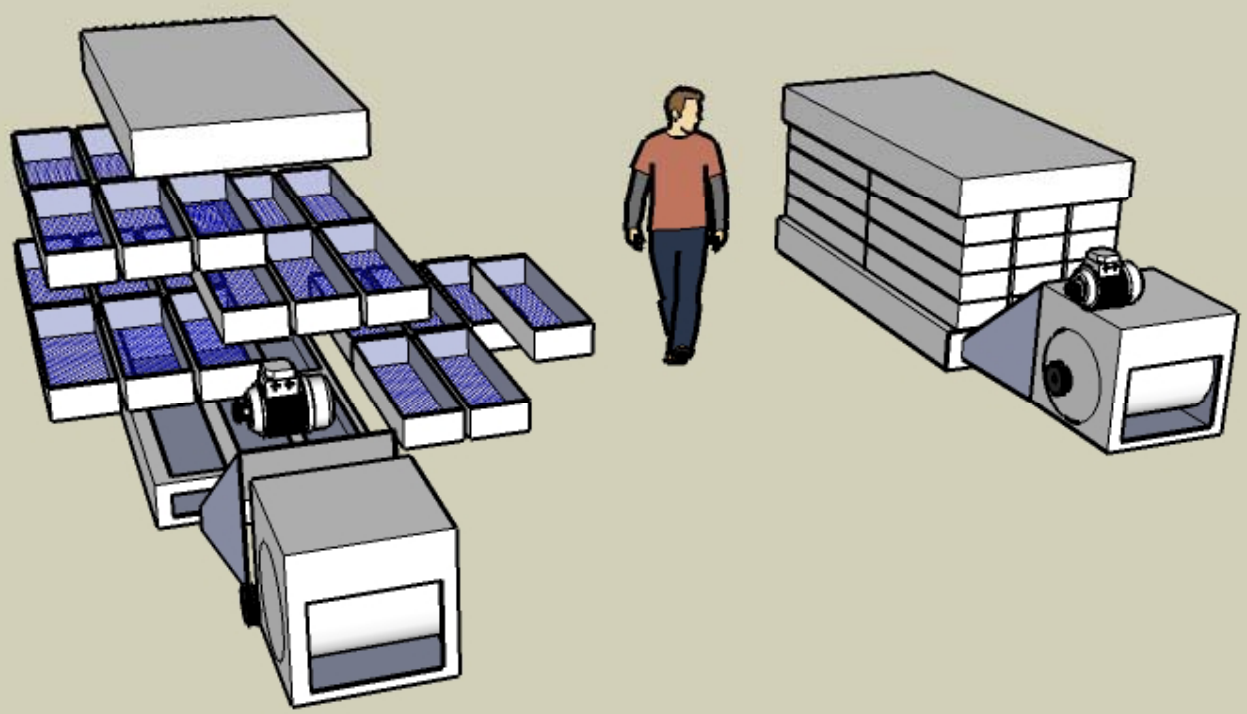

Copyright 2010 Gorst Valley Hops LLC All rights reserved

EXPLODED VIEW 1

OAST DESIGN RENDERINGS

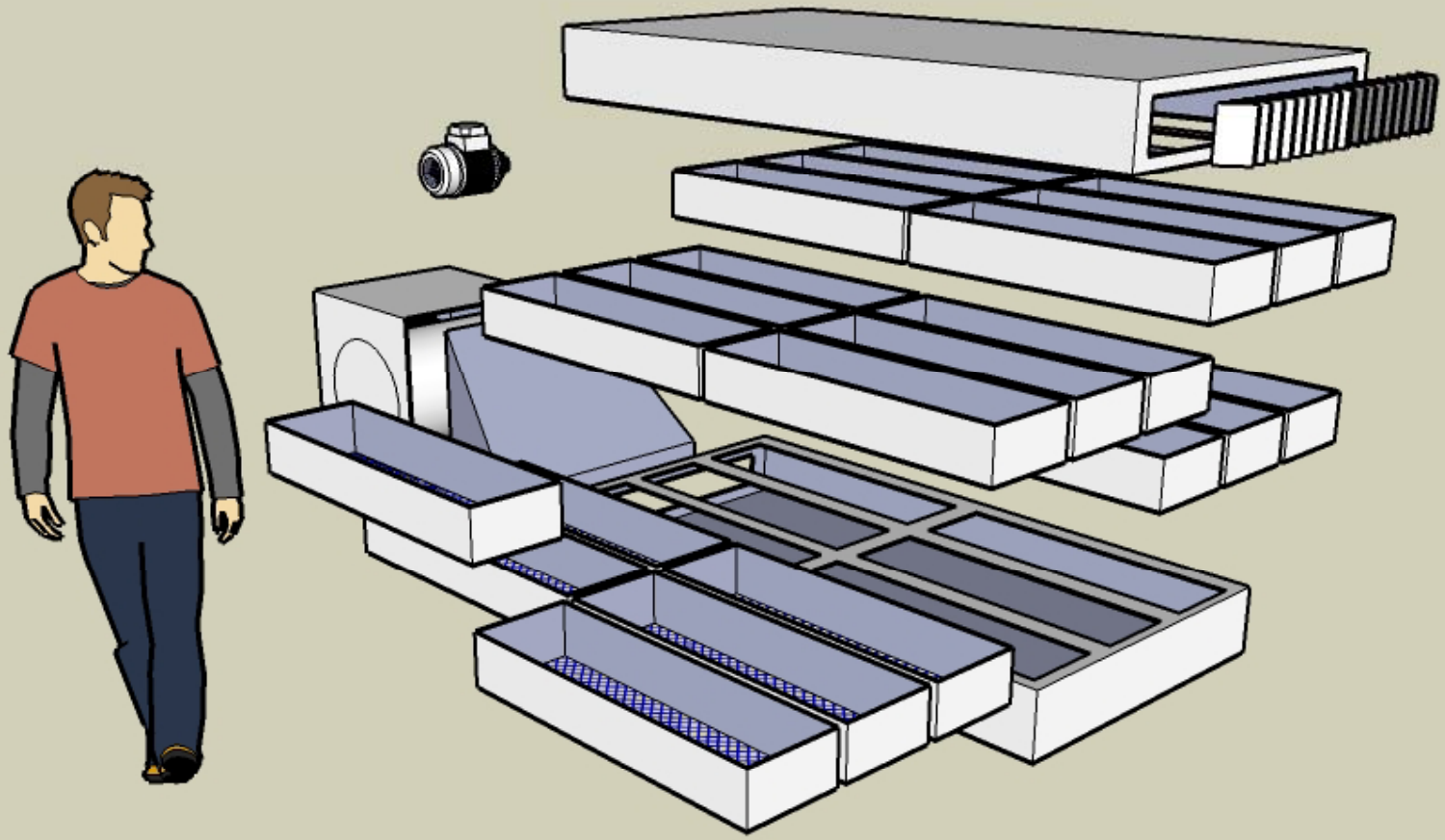

Gorst Valley HOPS

Copyright 2010 Gorst Valley Hops LLC All rights reserved

EXPLODED VIEW 2

OAST DESIGN OVERVIEW

Plenum Materials

- Covered tubular framework or rigid materials capable of withstanding compression load
- Wood structure should be lined with cleanable material such as fiberglass panels, polyethylene, aluminum/stainless steel
- Midpoint reinforcement shall be strong enough to maintain structural integrity without restricting airflow
- Side opening shall be constructed with a lip to which the air supply cowl may be attached
- Adhesive gasket material (closed-cell type) shall be attached to the plenum top to create a seal between the plenum and the chambers

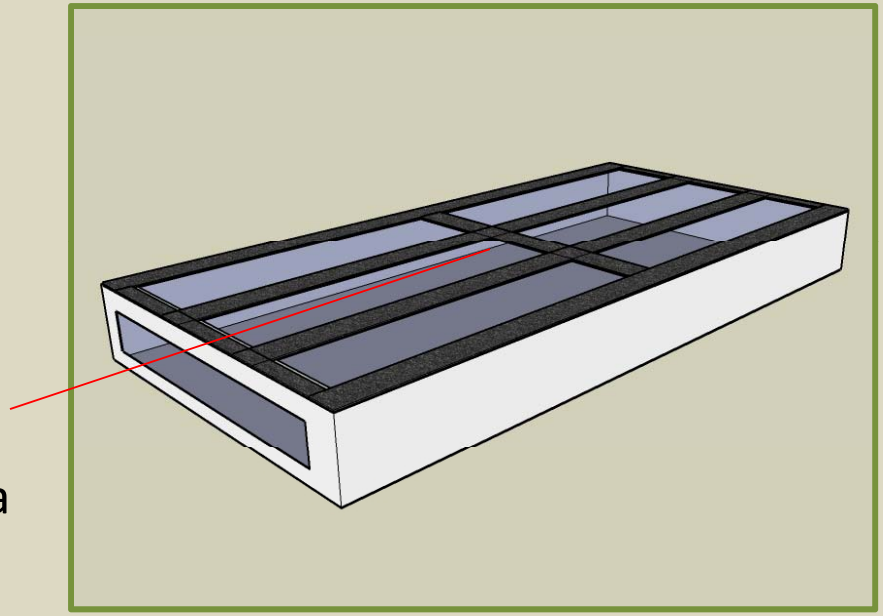

Copyright 2010 Gorst Valley Hops LLC All rights reserved

OAST DESIGN MEASUREMENTS

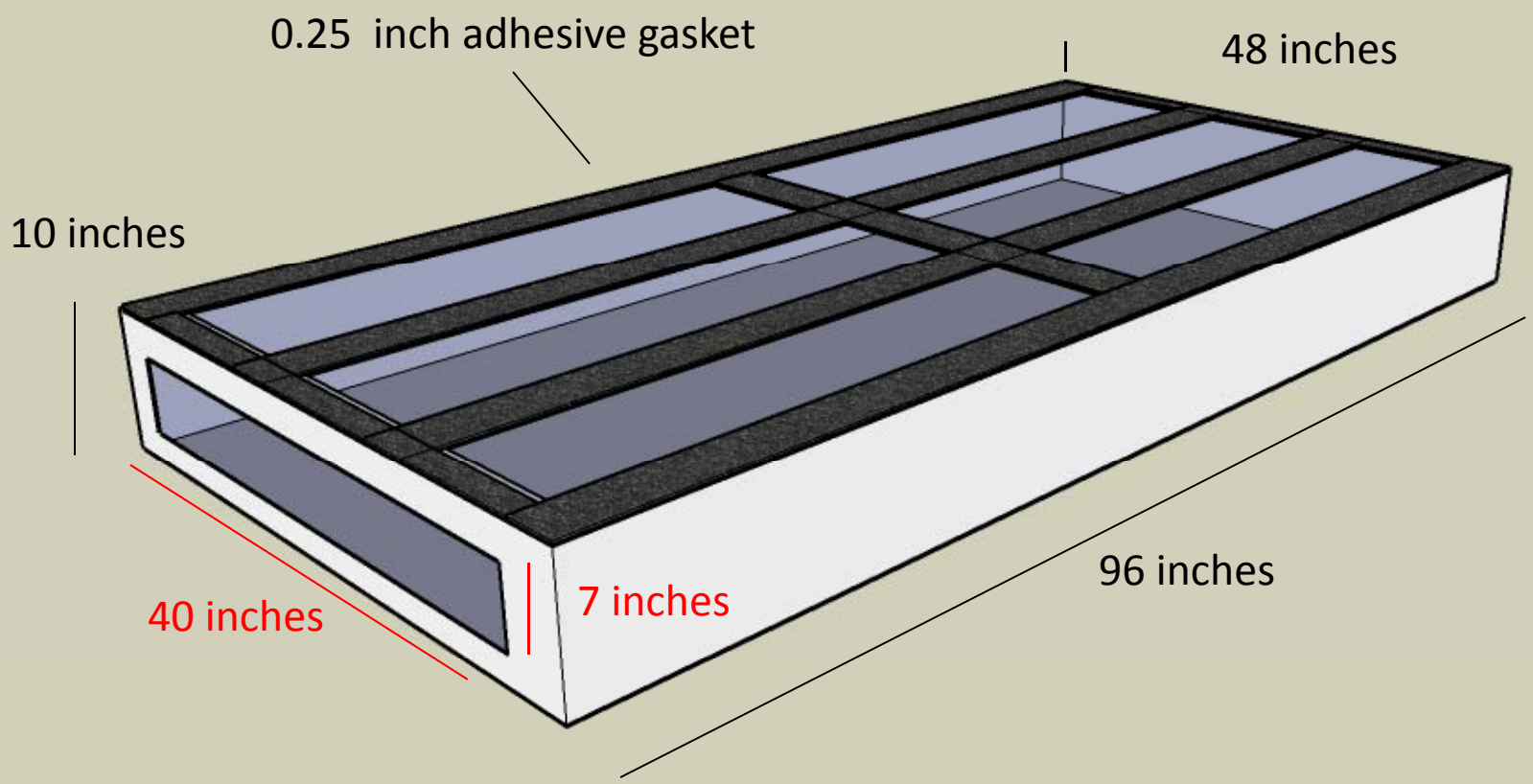

Copyright 2010 Gorst Valley Hops LLC All rights reserved

BOTTOM PLENUM

OAST DESIGN OVERVIEW

Plenum Materials

- Top plenum shall be constructed of the same material and manner as the bottom plenum
- Top plenum also contains a vane-controlled air inlet to allow for some measure of directional airflow control
- Vanes shall be constructed of lightweight yet rigid material such as corrugated polyethylene, PVC, or similar material.

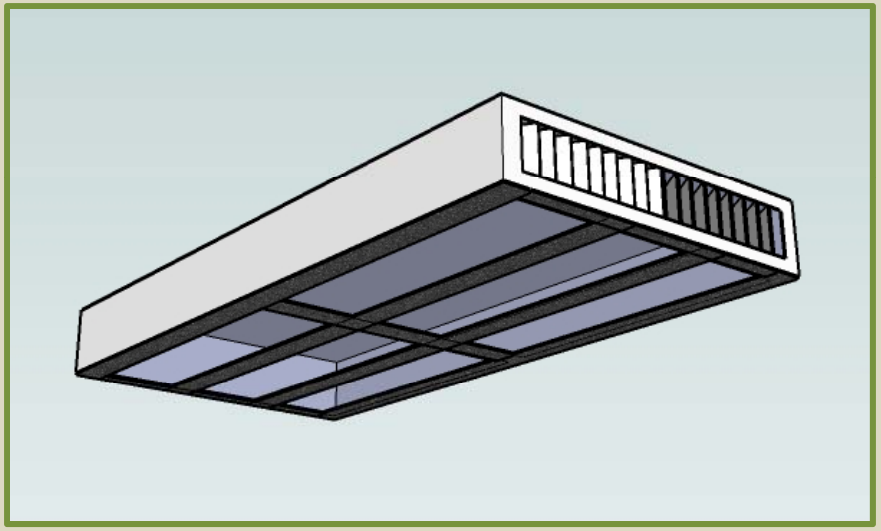

Copyright 2010 Gorst Valley Hops LLC All rights reserved

OAST DESIGN MEASUREMENTS

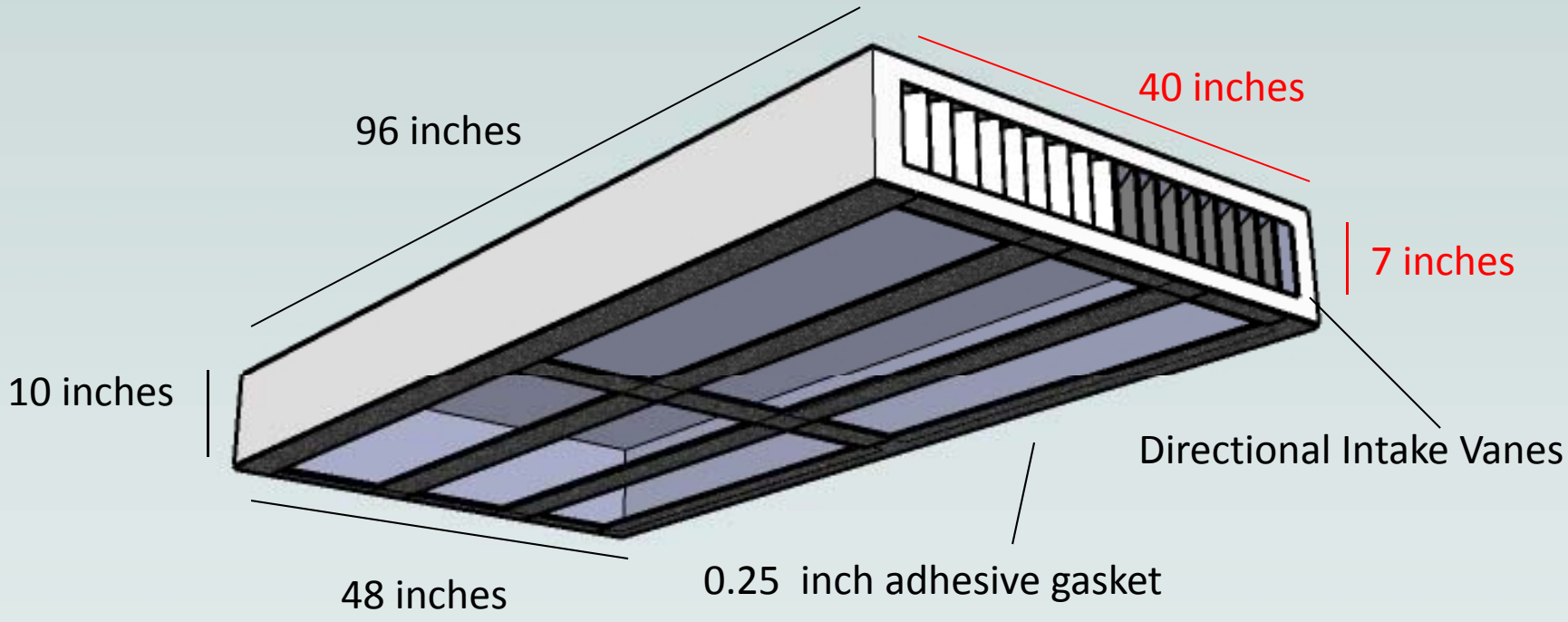

Copyright 2010 Gorst Valley Hops LLC All rights reserved

TOP PLENUM

OAST DESIGN OVERVIEW

Chamber Materials

- Polyethylene, PVC, or other non-corrosive, food-grade material
- Oast designed to utilize off-the-shelf straight walled stacking containers
- Pictured, as-built, **Buckhorn Straight Wall Container Solid 48x15X7-1/2**
- Available via Global Industrial Supply part # WG269086
- Requires bottom to be removed and replaced with ¼-inch galvanized mesh (see detail)

Copyright 2010 Gorst Valley Hops LLC All rights reserved

OAST DESIGN MEASUREMENTS

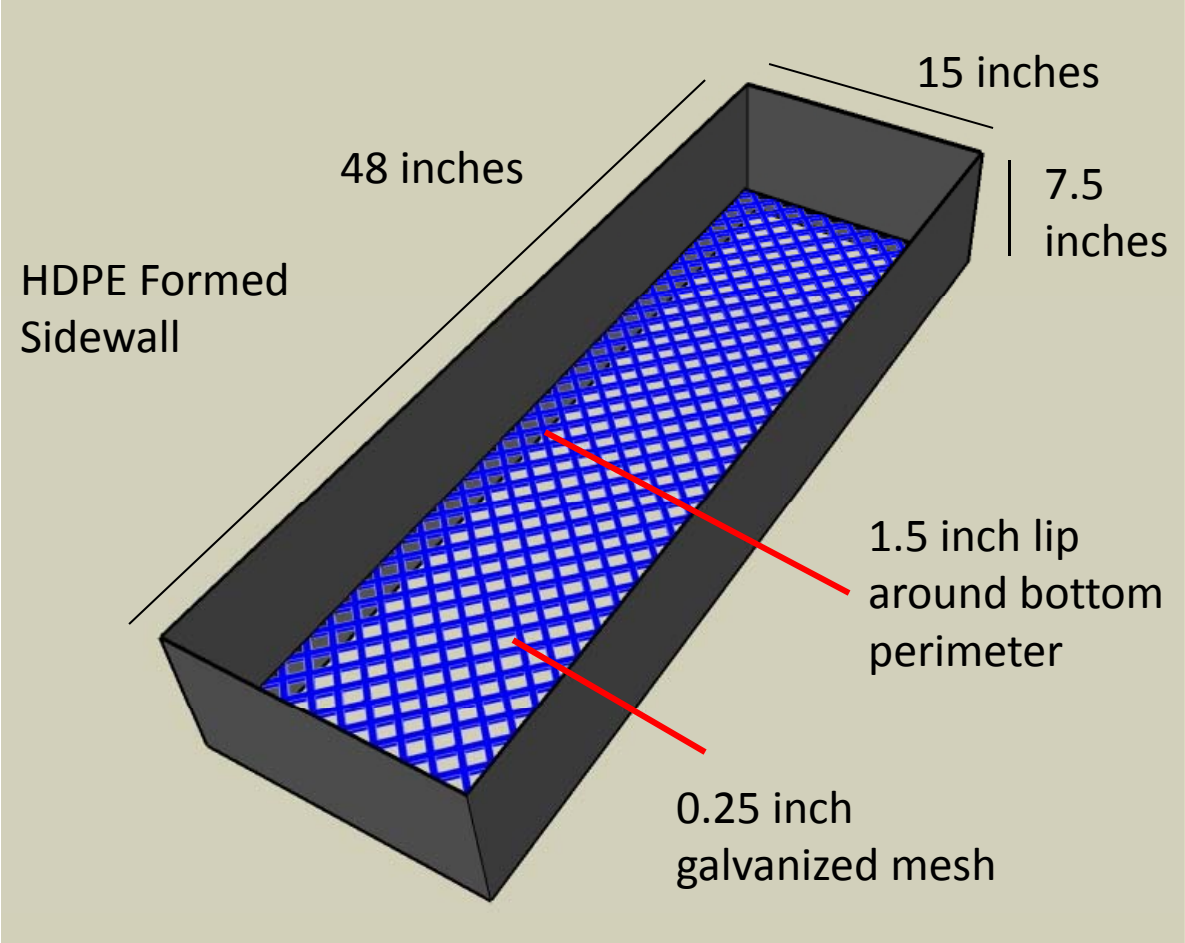

OAST COMPARTMENT SPECIFICS

Copyright 2010 Gorst Valley Hops LLC All rights reserved

GENERAL PLENUM DESIGN OVERVIEW

GVH Chamber Oast	General Plenum Design
6/15/10	Page 1
	Copyright Gorst Valley Hops 2010

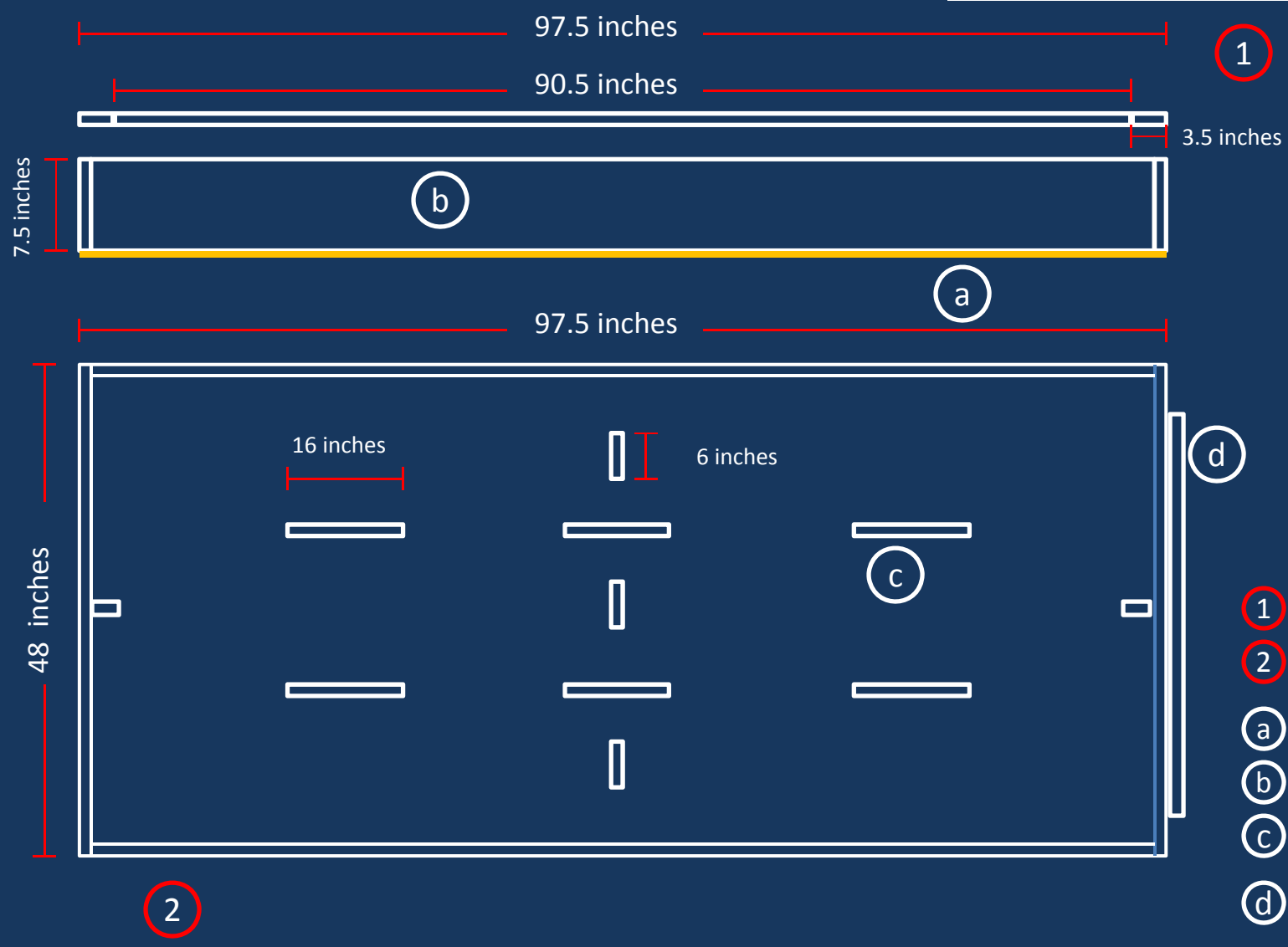

1 Plenum structural elevation

2 Plenum structural plan view

a 1/16 inches thick Fiberglass reinforced panel

b 7.5” x 0.75” cellular PVC

c 7.5” x 0.75” cellular PVC struts for flange support

d Outlet fan attachment flange, 0.75 “ PVC

Copyright 2010, Gorst Valley Hops LLC

PLENUM CROSS SECTION

GVH Chamber Oast	Plenum Cross Section
Plenum Flange Plan View	Page2
6/15/10	Copyright Gorst Valley Hops 2010

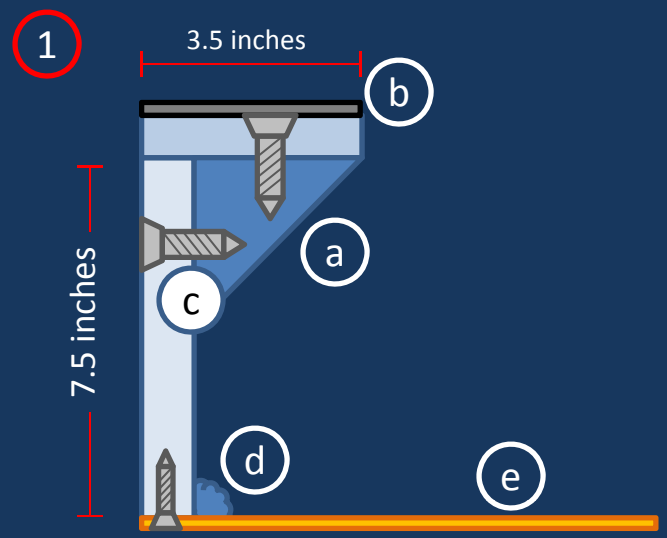

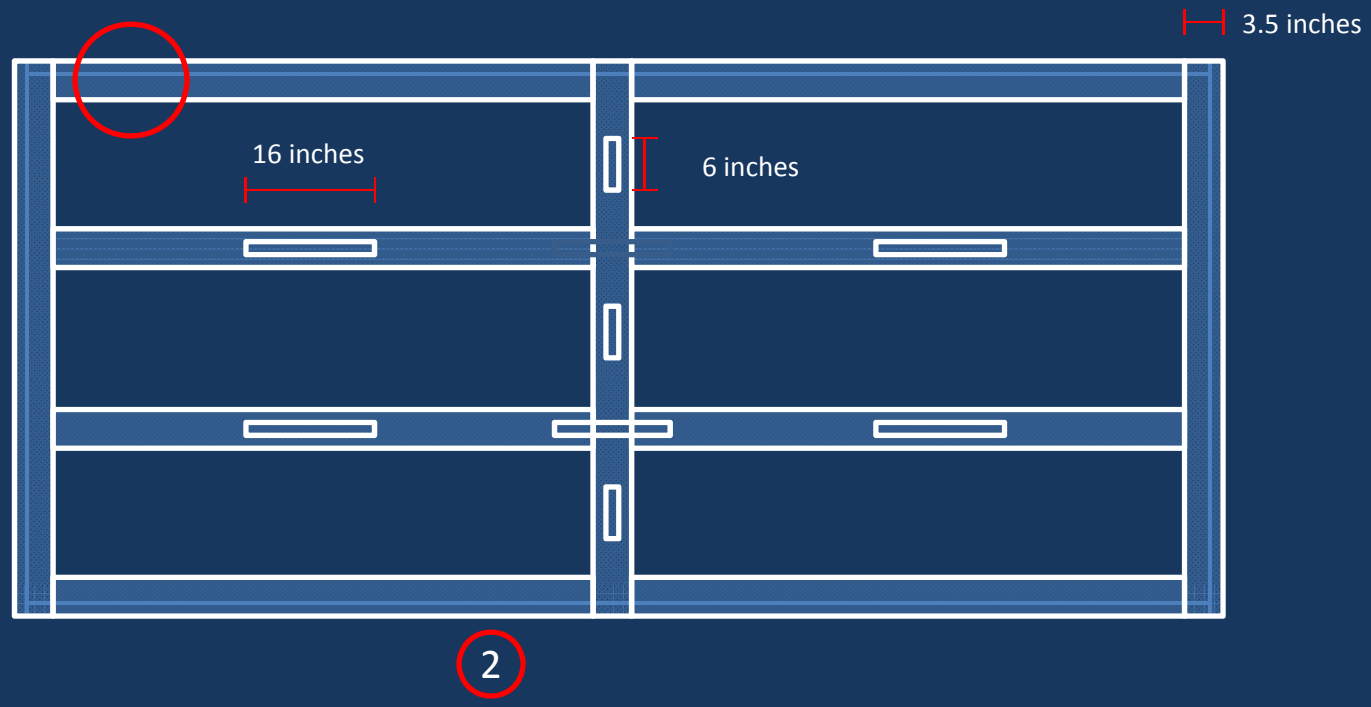

1 Plenum structural cross-section

2 Plenum sealing flange

a Triangular Support Blocks every 12 inches

b Adhesive backed closed cell foam or rubber

c Stainless Steel Screws

d Silicone Sealant

e 1/16 inches thick Fiberglass reinforced panel

Copyright 2010, Gorst Valley Hops LLC

BOTTOM PLENUM DESIGN OVERVIEW

GVH Chamber Oast	Bottom Plenum Design
6/15/10	Page 3
	Copyright Gorst Valley Hops 2010

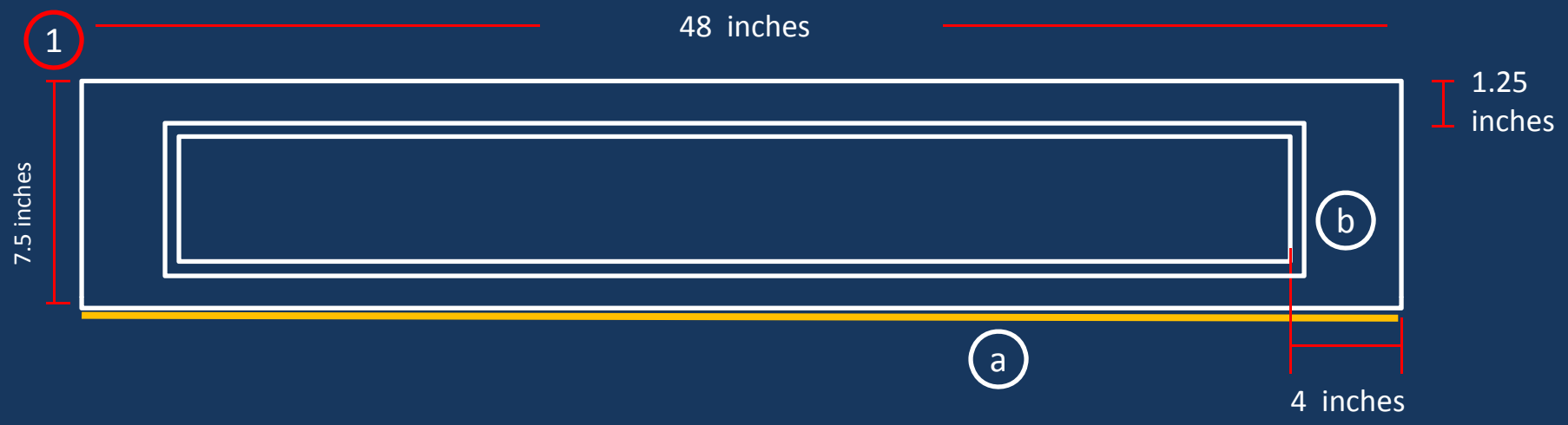

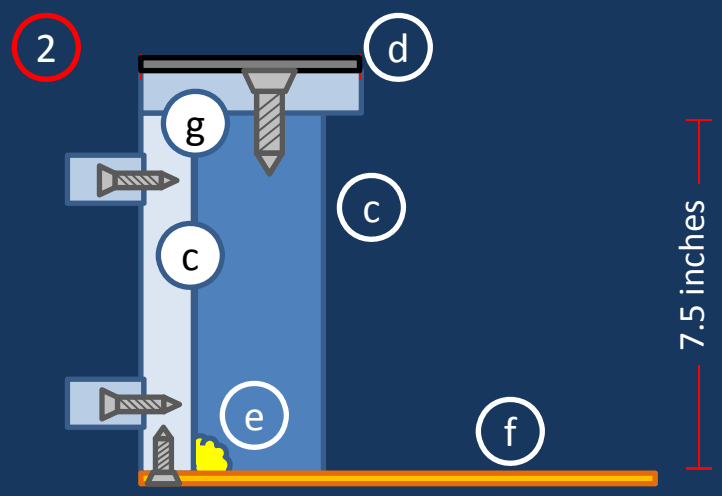

1 Plenum Outlet Elevation
2 Outlet fan attachment flange, 0.75 " PVC

a f 1/16 inches thick Fiberglass reinforced panel

b Fan Attachment Flange

c Rectangular Support Blocks mid-opening

d Adhesive backed closed cell foam or rubber

e Silicone Sealant

g Stainless Steel Screws

Copyright 2010, Gorst Valley Hops LLC

TOP PLENUM DESIGN OVERVIEW

GVH Chamber Oast	Bottom Plenum Design
6/15/10	Page 4
	Copyright Gorst Valley Hops 2010

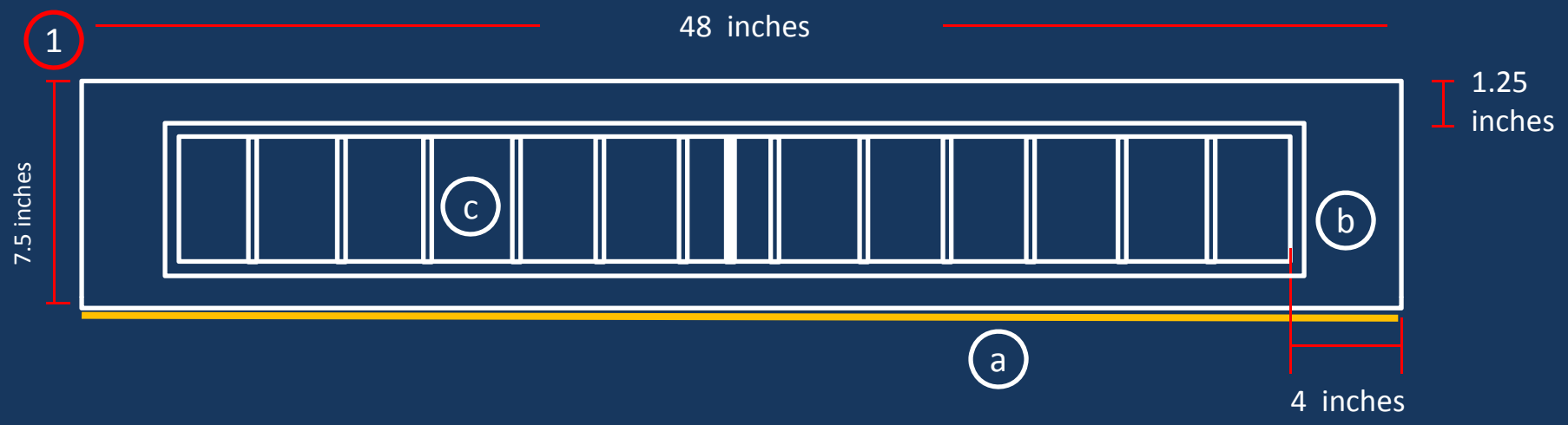

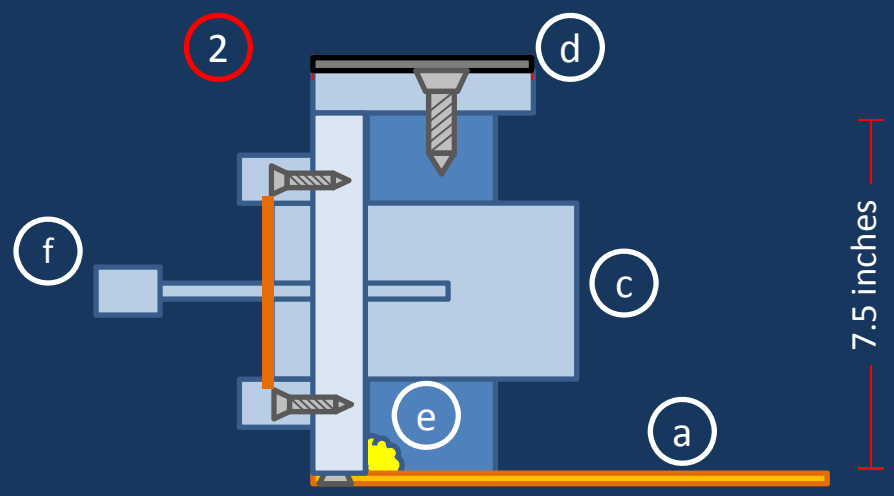

1 Plenum Outlet Elevation
2 Outlet fan attachment flange, 0.75 " PVC

a 1/16 inches thick Fiberglass reinforced panel

b Fan Attachment Flange

c 0.25" corrugated poly turning vanes

d Adhesive backed closed cell foam or rubber

e Silicone Sealant

f Vane Adjusting Spline

Copyright 2010, Gorst Valley Hops LLC

Gorst Valley Hops Mechanical Hop Picker Design Narrative

This narrative supports the Final Grant Report and describes the three different picking designs constructed and field tested by Gorst Valley Hops during the 2010 harvest season. Each design represents evolution based on lessons learned, simplification, and overall potential production costs.

Design A: Horizontal Dual Drum Rotational Harvester

This design roughly replicates the basic hop harvesting principles utilized by some European equipment manufacturers. Counter rotating drums containing purpose built hop picking fingers rake leaves, hop cones, side-arms, etc simultaneously from the top and bottom of the horizontal bine. Loose material falls onto a conveyor that evacuates harvested material. The bine is conveyed through the picking head via roller chain and attached by wedge cleats for easy removal. The cleaned bine returns to the operator where it is removed.

The machine contains six DC motors (2 motors to adjust the head clearance, a motor to drive each picking head, a motor to drive the conveyor chain, and a motor to drive the bottom conveyor). Each picking head is comprised of five rotating drums linked via sprockets and roller chain and timed such that the picking fingers do not interfere with adjacent drums. A one horsepower 24 volt permanent magnet motor drives the head. RPM range is adjustable from 0-160 utilizing pulse-width modulation controllers designed and built by Gorst valley Hops to handle the large amperage loads of the drive motor.

The two picking heads ride on threaded vertical rods which are driven by two 24-volt DC right angle gear motors to spread or narrow the gap between them. This allows the operator to adjust the aggressiveness of the picking action to account for vegetative vigor, bushiness, etc. These motors are controlled via double-throw, double pole (DTDP) toggle switches which return to center.

The bine conveyor chains are designed to pull the bine through the rotating drums as the conveyance direction is counter to the drum rotation. The bine enters the rear and is pulled through the machine, exiting up and over to return to the operator in a large loop. A single 24 volt DC motor is controlled by pulse-width modulation controllers designed and built by Gorst Valley Hops to control the speed with which the bine moves through the machine. The small evacuation conveyor belt is controlled by a conventional 12 volt DC motor and potentiometer.

Lessons Learned

This harvester is similar in design to many European hop picking machines only much smaller. Each component worked extremely well and quite well in unison. Nearly all of the parts for this picker, including electronics, are available off-the-shelf or required minimal customization. However, this machine had a difficult time handling extremely vigorous bines with long side-arms. The side arms tended to "ride" on the lower drums eventually becoming tangled and wound around the lower drums. The side arms would either break off or pull the entire bine from the conveying chain, resulting in a tangled drum and destroyed picking fingers. Less vigorous bines picked without any trouble under 30 seconds. Most leaf debris was small fragments easily separated by air classification.

Overall this design proved challenging to build and would require significant fabrication skills for any individual grower to build. Commercial production of this design would undoubtedly cost upwards of $20,000 should the issue of tangling be resolved. Ultimately this design was abandoned due to the large degree of re-design and the inability to accomplish it within the growing season for field testing.

Design B: Vertical Dual Drum Rotational Harvester (not shown)

This design closely resembled Picker A in that it utilized the same drum picking technique but the entire machine was moved to a vertical orientation. Instead of moving the bine perpendicular to the rotating drums to harvest, as in Picker A, the bine was moved between the drums from the side in a parallel fashion. The belief was the side arms would hang down due to gravity and be less likely to become tangled on the drum. Unfortunately the same entanglement issue occurred and this design was abandoned in favor of a belt raking action in Picker C.

Design C: Vertical Dual Belt Harvester

The concept for this picker design mimicked the current state-of-the-art process for hop picking in the Pacific Northwest, albeit on a very small scale. Two towers present rotating belts onto which picking finger bars are attached to a bine passing between them from left to right. The picking fingers move in a linear fashion opposed to the rotational motion of the drum picker.

The picking belts are comprised of roller chains connected by steel bars onto which hop picking fingers are attached. Picking finger bars are spaced approximately every two feet along the belt and affixed to the chain via specialty attachment links. The belt engages roller sprockets attached to shafts at the top, bottom, and rear of each tower. Each tower utilizes the same 24 volt one horsepower motors and custom controllers as the previous pickers. A chain conveyor

rail is mounted at the top of the harvester to which the bines are attached. The bine moves between the towers vertically and the linear raking action strips the cones and leaves from the bine.

Lessons Learned

This method proved successful while highlighting the comments from Pacific Northwest mechanics that these machines are broken more often than they are operational. The linear raking action eliminated the tangling experiences from Pickers A and B and holds merit for further study. Unfortunately the violent raking action also serves to dis-align the roller chain belts. The machine works quite well as long as all components are perfectly aligned. The design requires constant adjustment and frequent stoppage to adjust the chain belt orientations. The picker also needed to move faster prompting more issues with tuning.

This picker was less complicated than Picker A but still required considerable fabrication skills. While most parts and electronics are readily available, commercialization would require significant infrastructure capital and result in a $15,000 picker.

Design D: Horizontal Single Drum Rotational Harvester

Three less-than-optimal picker designs gave us pause which allowed us to return to the very basics of what is required of a true small-scale hop picker. Studies show 30 minutes per plant are required to hand harvest. While still a profitable venture, depending on hand harvesting increases the risk of crop quality loss due to simple logistics. Even a 50% reduction in harvesting time would greatly benefit the grower's bottom line. We then undertook a fourth and final picker design/build that could be called "semi-automatic" and truly small scale.

This picker uses the original concept of drum rotation but greatly simplified. The picking action is quite efficient as long as there is enough control over how the bine is presented to the drum to avoid tangling, cones shatter, etc. A single picking drum from Design A was mounted on a simple steel frame under which a vinyl bin was placed. A simple shroud covered most of the picking head and frame, leaving a small opening into which the bine could be fed by hand. The addition of an adjustable back plate provided a surface against which the bine could rest and be rotated to present all faces of the bine to the picking head. By lowering and raising the bine in and out of the picker, an operator can successfully pick a complete plant in 1-2 minutes with very little cone damage, clusters, or side arms requiring additional hand picking.

The picker is driven by a ¼ horsepower 90 volt DC motor and controlled by an off-the-shelf digital speed controlled and power supply. A torque limiter is placed between the motor and drum shaft to provide an adjustable safety limitation should anything (or anyone) become engaged with the drum that shouldn't be. In future designs a foot actuated "deadman" switch

must be depressed by the operator for the picker to function. Should the operator remove his foot, all power is instantly cut to the machine. Plans to add an evacuation conveyor leading to an automated sorting mechanism are also under consideration.

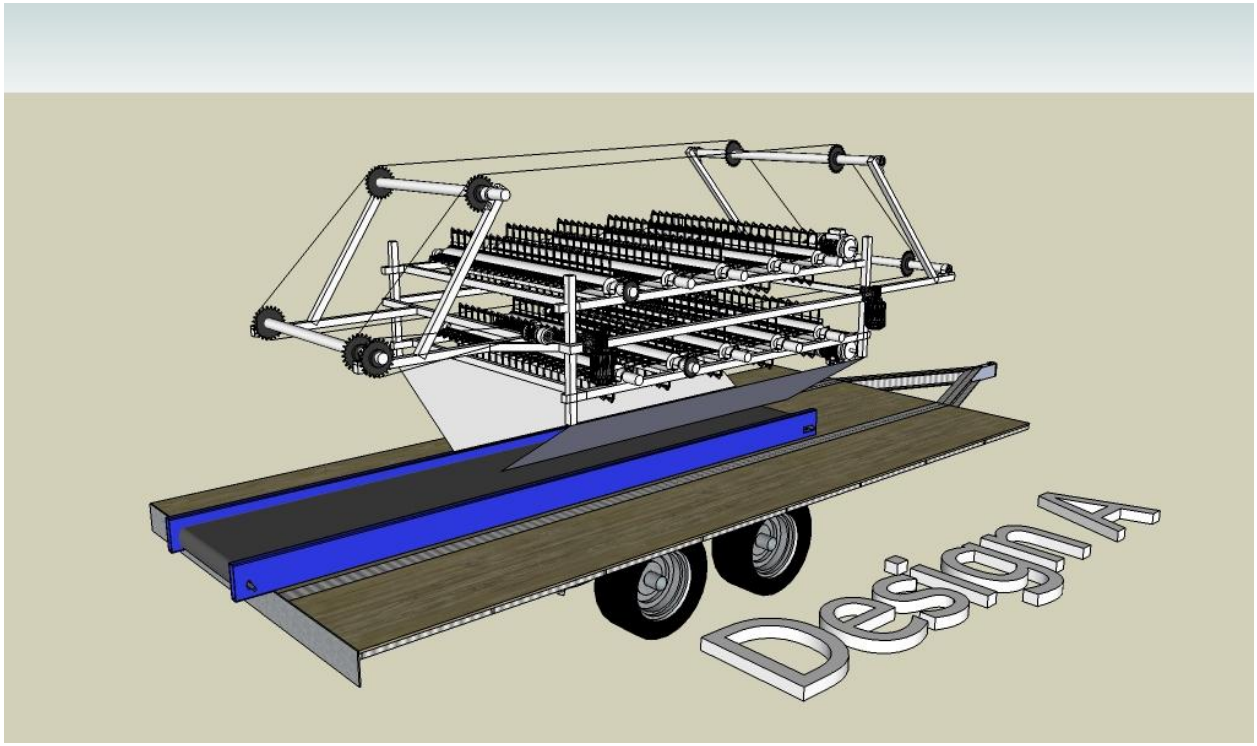

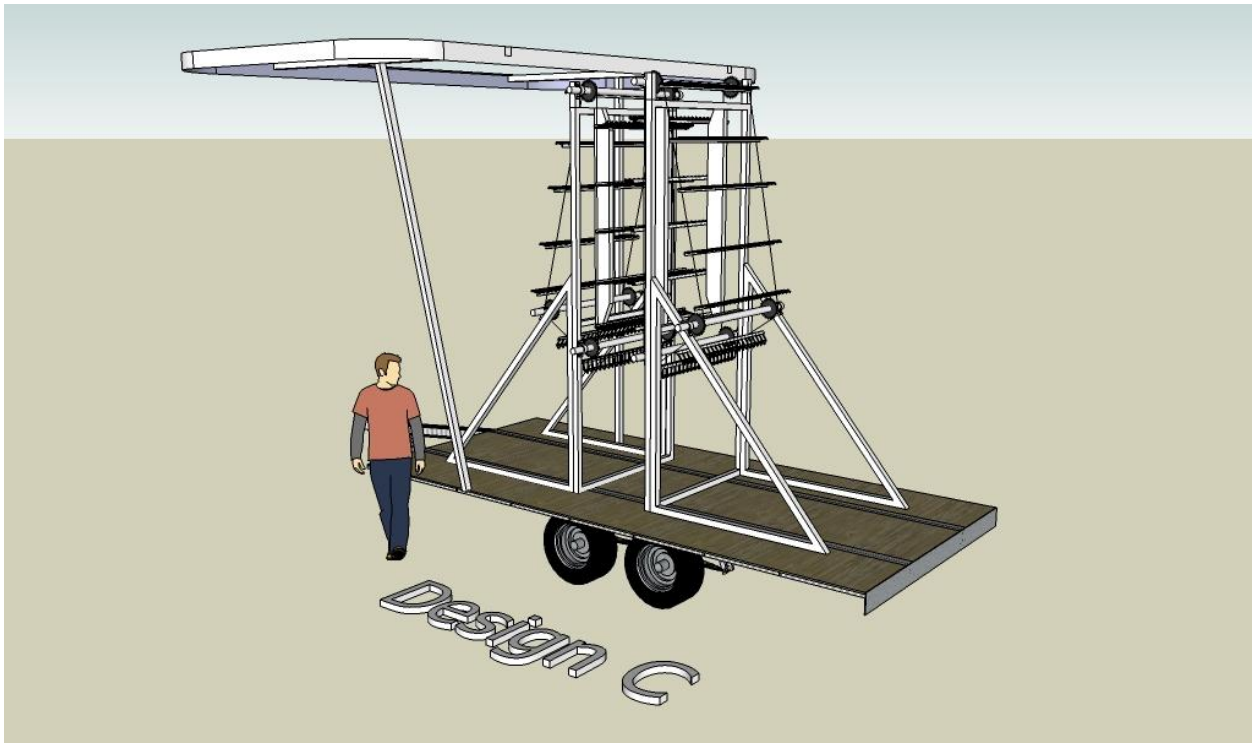

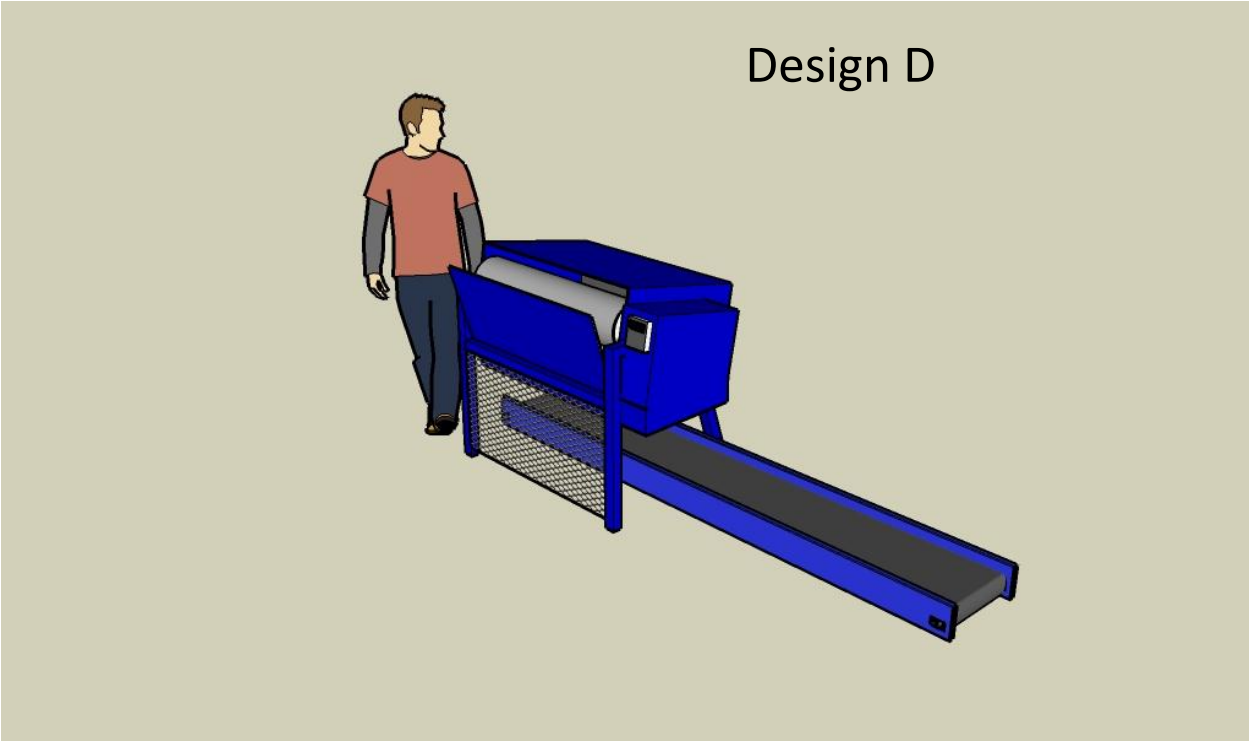
Design D